CITY OF MOUNT HOPE
FAYETTE COUNTY, WEST VIRGINIA

CONTRACT NO. 1 – LIFT STATION AND FORCEMAIN IMPROVEMENTS

ADDENDUM NO. 2

MARCH 4, 2019

To whom it may concern:

A. BOILER PLATE

1. Updated Wage Rates are included with this Addendum #2. **YOU MUST USE THE ATTACHED WAGE RATES INCLUDED WITH THIS ADDENDUM #2 WHEN PREPARING YOUR BID PACKAGE.**

B. SPECIFICATIONS

1. Specification Section 333218, "Submersible Non-Clog Pump Station", Paragraphs 2.1 and 2.17 have been revised. Please refer to the enclosed Specification Section.
2. Specification Section 263200, "Transfer Switches", has been added and is enclosed with this Addendum No. 2.
3. Specification Section 263213, "Packaged Engine Generators", has been added and is enclosed with this Addendum No. 2.

C. DRAWINGS

1. Sheets PS3 to PS6, inclusive, have been revised based on a new model of Sump Pump and dimensions of the Sump Pit. **REFER TO THE ATTACHED**

D. QUESTIONS AND CLARIFICATIONS

The following are clarifications and responses to questions posed by Contractors and suppliers regarding the above referenced project.

1. **Question:**

   Will you approve Eaton as a transfer switch manufacturer?

   Answer:

   Yes

2. **Question:**

What size is the Automatic Transfer Switch to be?

Answer:

The Automatic Transfer Switch shall be 3 phase, 400 Amp, NEMA 1 enclosure.

3. **Question:**

Is Caterpillar an approved Generator manufacturer?

Answer:

Yes

4. **Question:**

Could you please verify the size of the generator?

Answer:

The generator shall be 275 kW.

5. **Question:**

Could you please clarify if the generator enclosure will be a sound attenuated and weather proof or if it will just be a weather proof enclosure?

Answer:

The generator enclosure shall be weather proof only.

6. **Question:**

Could you please clarify if the generator is to be diesel or natural gas?

Answer:

The generator shall be diesel.

7. **Question:**

Can the cleared trees and brush be left on site?

Answer:

No

8. **Question:**

What type of DIP is required for the aerial crossing?

Answer:

The DIP section of the tank drain line shall be flanged.

9. **Question:**

What type of material is the existing force main?

Answer:

The Owner believes the existing forcemain is Transite.

E. GENERAL

1. Minutes and the Sign-In Sheet from the 2nd Pre-Bid Conferenced held on February 20, 2019 are included with this Addendum No. 2.
2. B&O Taxes are required for this contract.
3. A City of Mount Hope Contractor's License is required for this project.
4. American Iron and Steel (AIS) requirements do not apply to equipment and electrical materials.
5. The Engineer's cost estimate for this project is $895,000.00.
6. Bidders are hereby notified to acknowledge receipt of all addenda in space provided on the Bid Form.

If you have any questions or need any other information please do not hesitate to contact me.

Sincerely,

THE THRASHER GROUP, INC.

MICHAEL STONE, PE.
Project Engineer

MICHAEL P. STONE
REGISTERED
22721
STATE OF WEST VIRGINIA
PROFESSIONAL ENGINEER
3/4/19

Enclosures

SECTION 263200 - TRANSFER SWITCHES

PART 1 - GENERAL

1.1 SUMMARY

A. This Section includes transfer switches rated 600 V and less, including the following:
   1. Automatic transfer switch.

1.2 SUBMITTALS

A. Product Data: Include ratings and dimensioned plans, sections, and elevations showing minimum clearances, conductor entry provisions, gutter space, installed features and devices, and material lists for each switch specified.

B. Wiring Diagrams: Detail wiring for transfer switches and differentiate between manufacturer-installed and field-installed wiring. Show both power and control wiring.

C. Qualification Data: For firms and persons specified in "Quality Assurance" Article.

D. Field Test Reports: Test and inspection results for compliance with performance requirements in Part 3.

E. Maintenance Data: For each type of product to include in maintenance manuals. Include all features and operating sequences, both automatic and manual. List all factory settings of relays and provide relay-setting and calibration instructions, including software, where applicable.

1.3 QUALITY ASSURANCE

A. Manufacturer Qualifications: Maintain a service center capable of providing emergency maintenance and repairs at Project site with an eight-hour maximum response time.

B. Testing Agency Qualifications: Testing agency as defined by OSHA in 29 CFR 1910.7 or a member company of the InterNational Electrical Testing Association and that is acceptable to authorities having jurisdiction.
   1. Testing Agency's Field Supervisor: Person currently certified by the InterNational Electrical Testing Association or the National Institute for Certification in Engineering Technologies (Level 3 or higher), to supervise on-site testing specified in Part 3.

C. Source Limitations: Obtain automatic transfer switch, bypass/isolation switch, remote annunciators, and remote annunciator and control panels through one source from a single manufacturer.

D. Electrical Components, Devices, and Accessories: Listed and labeled as defined in NFPA 70, Article 100, for emergency service under UL 1008, by a testing agency acceptable to authorities having jurisdiction.

E. Comply with NEMA ICS 1.

F. Comply with NFPA 70.

G. Comply with NFPA 99.

H. Comply with NFPA 110.

I. Comply with UL 1008.

PART 2 - PRODUCTS

2.1 TRANSFER SWITCH

A. Manufacturers: Subject to compliance with requirements, provide products by one of the following:
   1. Generac Industrial Power
   2. Cummins Power Generation
   3. Caterpillar, Inc.
   4. Kohler Co.

2.2 GENERAL TRANSFER-SWITCH PRODUCT REQUIREMENTS

A. Indicated Current Ratings: Apply as defined in UL 1008 for continuous loading and total system transfer, including tungsten filament lamp loads not exceeding 30 percent of switch ampere rating, unless otherwise indicated.

B. Tested Fault-Current Closing and Withstand Ratings: Adequate for duty imposed by protective devices at installation locations in Project under the fault conditions indicated, based on testing according to UL 1008.
   1. Where Transfer Switch Includes Internal Fault-Current Protection: Rating of switch and trip unit combination exceeds indicated fault-current value at installation location.

C. Solid-State Controls: Repetitive accuracy of all settings is plus or minus 2 percent or better over an operating temperature range of minus 20 to plus 70 deg C.

D. Resistance to Damage by Voltage Transients: Components meet or exceed voltage-surge withstand capability requirements when tested according to IEEE C62.41. Components meet or exceed voltage-impulse withstand test of NEMA ICS 1.

E. Neutral Terminal: Solid and fully rated, unless otherwise indicated.

F. Oversize Neutral: Ampacity and switch rating of neutral path through units indicated for oversize neutral are double nominal rating of circuit in which switch is installed.

G. Enclosures: General-purpose NEMA 250, Type 1complying with NEMA ICS 6; UL 508, unless otherwise indicated.
   1. Outdoor: NEMA 250, Type 3R stainless steel.

H. Heater: Equip switches exposed to outdoor temperature and humidity conditions, and other units indicated, with an internal heater. Provide thermostat within enclosure to control heater.

I. Factory Wiring: Train and bundle factory wiring and label consistent with Shop Drawings, either by color code or by numbered or lettered wire and cable tape markers at terminations.
   1. Designated Terminals: Pressure type suitable for types and sizes of field wiring indicated.
   2. Power-Terminal Arrangement and Field-Wiring Space: Suitable for top, side, or bottom entrance of feeder conductors as indicated.
   3. Control Wiring: Equipped with lugs suitable for connection to terminal strips.

J. Electrical Operation: Accomplish by a nonfused, momentarily energized solenoid or electric-motor-operated mechanism, mechanically and electrically interlocked in both directions.

K. Switch Characteristics: Designed for continuous-duty repetitive transfer of full-rated current between active power sources.
   1. Limitation: Switches using molded-case switches or circuit breakers or insulated-case circuit-breaker components are not acceptable.
   2. Switch Action: Double throw; mechanically held in both directions.
   3. Contacts: Silver composition or silver alloy for load-current switching. Conventional automatic transfer-switch units rated 225 A and greater have separate arcing contacts.

2.3 AUTOMATIC TRANSFER SWITCHES

A. Comply with Level 1 equipment according to NFPA 110.

B. Switching Arrangement: Double-throw type, incapable of pauses or intermediate position stops during normal functioning, unless otherwise indicated.

C. Manual Switch Operation: Under load, with door closed and with either or both sources energized. Transfer time is the same as for electrical operation. Control circuit automatically disconnects from electrical operator during manual operation.

D. Manual Switch Operation: Unloaded. Control circuit automatically disconnects from electrical operator during manual operation.

E. Programmed Neutral Switch Position: Switch operator has a programmed neutral position arranged to provide a midpoint between the two working switch positions, with an intentional, time-controlled pause at midpoint during transfer. Pause is adjustable from 0.5 to 30 seconds minimum and factory set for 0.5 second, unless otherwise indicated. Time delay occurs for both transfer directions. Pause is disabled, unless both sources are live.

2.4 AUTOMATIC TRANSFER-SWITCH FEATURES

A. Undervoltage Sensing for Each Phase of Normal Source: Senses low phase-to-ground voltage on each phase. Pickup voltage is adjustable from 85 to 100 percent of nominal, and dropout voltage is adjustable from 75 to 98 percent of pickup value. Factory set for pickup at 90 percent and dropout at 85 percent.

B. Time delay for override of normal-source voltage sensing delays transfer and engine start signals. Adjustable from zero to six seconds, and factory set for one second.

C. Voltage/Frequency Lockout Relay: Prevents premature transfer to generator set. Pickup voltage is adjustable from 85 to 100 percent of nominal. Factory set for pickup at 90 percent. Pickup frequency is adjustable from 90 to 100 percent of nominal. Factory set for pickup at 95 percent.

D. Time Delay for Retransfer to Normal Source: Adjustable from 0 to 30 minutes; factory set for 10 minutes. Provides automatic defeat of delay on loss of voltage or sustained undervoltage of emergency source, provided normal supply has been restored.

E. Test Switch: Simulates normal-source failure.

F. Switch-Position Pilot Lights: Indicate source to which load is connected.

G. Source-Available Indicating Lights: Supervise sources via transfer-switch, normal- and emergency-source sensing circuits.
   1. Normal Power Supervision: Green light with nameplate engraved "Normal Source Available."
   2. Emergency Power Supervision: Red light with nameplate engraved "Emergency Source Available."

H. Unassigned Auxiliary Contacts: Two normally open single-pole, double-throw contacts for each switch position, rated 10 A at 240-V ac.

I. Transfer Override Switch: Overrides automatic retransfer control so automatic transfer switch will remain connected to emergency power source regardless of condition of normal source. Pilot light indicates override status.

J. Engine Starting Contacts: One isolated, normally closed and one isolated, normally open, rated 10 A at 32-V dc minimum.

K. Engine Shutdown Contacts: Time delay adjustable from zero to five minutes; factory set for five minutes. Initiates shutdown at remote engine-generator controls after retransfer of load to normal source.

L. Engine-Generator Exerciser: Solid-state, programmable-time switch starts engine-generator set and transfers load to it from normal source for a preset time, then retransfers and shuts down engine after a preset cool-down period. Initiates exercise cycle at preset intervals adjustable from 7 to 30 days. Running periods are adjustable from 10 to 30 minutes. Factory settings are for 7-day exercise cycle, 20-minute running period, and 5-minute cool-down period. Exerciser features include the following:

1. Exerciser Transfer Selector Switch: Permits selection of exercise with and without load transfer.
2. Push-button programming control with digital display of settings.
3. Integral battery operation of time switch when normal control power is not available.

2.5 BATTERY CHARGER

A. Switch mounted, pre-wired, current-limiting, automatic-equalizing and float-charging type. Unit complies with UL 1236 and includes the following features:
   1. Operation: Equalizing-charging rate of 10 A is initiated automatically after battery has lost charge until an adjustable equalizing voltage is achieved at battery terminals. Unit then automatically switches to a lower float-charging mode and continues operating in that mode until battery is discharged again.
   2. Automatic Temperature Compensation: Adjusts float and equalizes voltages for variations in ambient temperature from minus 40 deg C to plus 60 deg C to prevent overcharging at high temperatures and undercharging at low temperatures.
   3. Automatic Voltage Regulation: Maintains output voltage constant regardless of input voltage variations up to plus or minus 10 percent.
   4. Ammeter and Voltmeter: Flush mounted in door. Meters indicate charging rates.

2.6 FINISHES

A. Enclosures: Manufacturer's standard enamel over corrosion-resistant pretreatment and primer.

2.7 SOURCE QUALITY CONTROL

A. Factory Test Components, Assembled Switches, and Associated Equipment: Ensure proper operation. Check transfer time and voltage, frequency, and time-delay settings for compliance with specified requirements. Perform dielectric strength test complying with NEMA ICS 1.

PART 3 - EXECUTION

3.1 INSTALLATION

A. Floor-Mounted Switch: Level and anchor unit to floor.

B. Identify components according to Division 26 Section "Basic Electrical Materials and Methods."

3.2 WIRING TO REMOTE COMPONENTS

A. Match type and number of cables and conductors to control and communications requirements of transfer switches as recommended by manufacturer. Increase raceway sizes at no additional cost to Owner if necessary to accommodate required wiring.

3.3 CONNECTIONS

A. Ground equipment as indicated and as required by NFPA 70.

3.4 FIELD QUALITY CONTROL

A. Testing: Test transfer-switch products by operating them in all modes. Perform tests recommended by manufacturer under the supervision of manufacturer's factory-authorized service representative. Correct deficiencies and report results in writing. Record adjustable relay settings.

B. Testing: Owner will engage a qualified testing agency to perform the following field quality-control testing:

C. Testing: Engage a qualified testing agency to perform the following field quality-control testing:

D. Testing: Perform the following field quality-control testing under the supervision of the manufacturer's factory-authorized service representative in addition to tests recommended by the manufacturer:
   1. Before energizing equipment, after transfer-switch products have been installed:
      a. Measure insulation resistance phase-to phase and phase-to-ground with insulation-resistance tester. Include external annunciation and control circuits. Use test voltages and procedure recommended by manufacturer. Meet manufacturer's specified minimum resistance.
      b. Check for electrical continuity of circuits and for short circuits.
      c. Inspect for physical damage; proper installation and connection; and integrity of barriers, covers, and safety features.
      d. Verify that manual transfer warnings are properly placed.
      e. Perform manual transfer operation.
   2. After energizing circuits, demonstrate interlocking sequence and operational function for each switch at least three times.
      a. Simulate power failures of normal source to automatic transfer switches and of emergency source with normal source available.
      b. Simulate loss of phase-to-ground voltage for each phase of normal source.
      c. Verify time-delay settings.
      d. Verify pickup and dropout voltages by data readout or inspection of control settings.
      e. Perform contact-resistance test across main contacts and correct values exceeding 500 microhms and values for one pole deviating by more than 50 percent from other poles.
      f. Verify proper sequence and correct timing of automatic engine starting, transfer time delay, retransfer time delay on restoration of normal power, and engine cool-down and shutdown sequence.

E. Coordinate tests with tests of generator plant and run them concurrently.

F. Report results of tests and inspections in writing. Record adjustable relay settings and measured insulation and contact resistances and time delays. Attach a label or tag to each tested component indicating satisfactory completion of tests.

3.5 CLEANING

A. After completing equipment installation, inspect unit components. Remove paint splatters and other spots, dirt, and debris. Repair damaged finish to match original finish.

B. Clean equipment internally, on completion of installation, according to manufacturer's written instructions.

3.6 DEMONSTRATION

A. Engage a factory-authorized service representative to train Owner's personnel to adjust, operate, and maintain transfer switches and related equipment as specified below:
   1. Coordinate this training with that for generator equipment.
   2. Train Owner's maintenance personnel on procedures and schedules for starting and stopping, troubleshooting, servicing, and maintaining equipment.
   3. Review data in maintenance manuals.
   4. Schedule training with Owner, through Engineer, with at least seven days' advance notice.
   5. Provide a minimum of four hours of instruction.

END OF SECTION 263200

SECTION 263213 - PACKAGED ENGINE GENERATORS

PART 1 - GENERAL

1.1 SUMMARY

A. This Section includes packaged diesel-engine generator sets with the following features and accessories:

1. Engine generator set.
2. Muffler.
3. Outdoor enclosure.
4. Starting battery.
5. Base-Mounting fuel oil tank.

1.2 DEFINITIONS

A. Standby Rating: Power output rating equal to the power the generator set delivers continuously under normally varying load factors for the duration of a power outage.

B. Operational Bandwidth: The total variation from the lowest to highest value of a parameter over the range of conditions indicated, expressed as a percentage of the nominal value of the parameter.

C. Steady-State Voltage Modulation: The uniform cyclical variation of voltage within the operational bandwidth, expressed in Hertz or cycles per second.

1.3 SUBMITTALS

A. Product Data: Include data on features, components, ratings, and performance. Include the following:

1. Dimensioned outline plan and elevation drawings of engine generator set and other components specified.
2. Thermal damage curve for generator.
3. Time-current characteristic curves for generator protective device.

B. Shop Drawings: Indicate fabrication details, dimensions, weights, loads, required clearances, method of field assembly, components, and location and size of each field connection.

1. Wiring Diagrams: Detail wiring for power and control connections and differentiate between factory-installed and field-installed wiring.

C. Field Test and Observation Reports: Test results and inspection records as specified in Part 3.

D. Certified summary of prototype-unit test report.

E. Certified Test Reports: For components and accessories that are equivalent, but not identical, to those tested on prototype unit.

F. Certified Summary of Performance Tests: Demonstrate compliance with specified requirement to meet performance criteria for sensitive loads.

G. Factory Test Reports: For units to be shipped for this Project, showing evidence of compliance with specified requirements.

H. Sound measurement test report.

I. Maintenance Data: For each packaged engine generator and accessories. Include the following:

1. Detail operating instructions for both normal and abnormal conditions.

1.4 QUALITY ASSURANCE

A. Manufacturer Qualifications: Maintain a service center capable of emergency maintenance and repairs at the Project with eight hours' maximum response time.

B. Source Limitations: Obtain packaged engine generator and auxiliary components specified in this Section through one source from a single manufacturer.

C. Electrical Components, Devices, and Accessories: Listed and labeled as defined in NFPA 70, Article 100, by a testing agency acceptable to authorities having jurisdiction.

D. Comply with NFPA 70.

E. Comply with NFPA 99.

1.5 DELIVERY, STORAGE, AND HANDLING

A. Deliver engine generator set and system components to their final locations in protective wrappings, containers, and other protection that will exclude dirt and moisture and prevent damage from construction operations. Remove protection only after equipment is safe from such hazards.

1.6 WARRANTY

A. General Warranty: Special warranty specified in this Article shall not deprive Owner of other rights Owner may have under other provisions of the Contract Documents and shall be in addition to, and run concurrent with, other warranties made by Contractor under requirements of the Contract Documents.

B. Special Warranty: Written warranty, executed by manufacturer agreeing to repair or replace packaged engine generator and auxiliary components that fail in materials or workmanship within specified warranty period.

1. Warranty Period: Five years from date of Substantial Completion.

1.7 MAINTENANCE SERVICE

A. Maintenance: At Substantial Completion, begin 12 months' full maintenance by skilled employees of the manufacturer's designated service organization. Include quarterly exercising to check for proper starting, load transfer, and running under load. Include routine preventive maintenance as recommended by manufacturer and adjusting as required for proper operation. Maintenance agreements shall include parts and supplies as used in the manufacture and installation of original equipment.

1.8 EXTRA MATERIALS

A. Furnish extra materials described below that match products installed and that are packaged with protective covering for storage and identified with labels describing contents.

1. Filters: One set each of lubricating oil, fuel, and combustion-air filters.

PART 2 - PRODUCTS

2.1 MANUFACTURERS

A. Manufacturers: Subject to compliance with requirements, provide products by one of the following:

1. Generac Industrial Power
2. Cummins Power Generation
3. Caterpillar, Inc.; Engine Div.
4. Kohler Co; Generator Division.

2.2 ENGINE GENERATOR SET

A. Furnish a coordinated assembly of compatible components.

B. Output Connections: Three phase, four wire.

C. Safety Standard: Comply with ASME B15.1.

D. Nameplates: Each major system component is equipped with a conspicuous nameplate of component manufacturer. Nameplate identifies manufacturer of origin and address, and model and serial number of item.

E. Limiting dimensions indicated for system components are not exceeded.

F. Skid: Adequate strength and rigidity to maintain alignment of mounted components without depending on a concrete foundation. Skid is free from sharp edges and corners. Lifting attachments are arranged to facilitate lifting with slings without damaging any components.

2.3 GENERATOR-SET PERFORMANCE

A. Steady-State Voltage Operational Bandwidth: 4 percent of rated output voltage from no load to full load.

B. Steady-State Voltage Modulation Frequency: Less than 1 Hz.

C. Transient Voltage Performance: Not more than 20 percent variation for 50 percent step-load increase or decrease. Voltage recovers to remain within the steady-state operating band within three seconds.

D. Steady-State Frequency Operational Bandwidth: 0.5 percent of rated frequency from no load to full load.

E. Steady-State Frequency Stability: When system is operating at any constant load within rated load, there are no random speed variations outside the steady-state operational band and no hunting or surging of speed.

F. Transient Frequency Performance: Less than 5 percent variation for a 50 percent step-load increase or decrease. Frequency recovers to remain within the steady-state operating band within five seconds.

G. Output Waveform: At no load, harmonic content measured line to line or line to neutral does not exceed 5 percent total and 3 percent for single harmonics. The telephone influence factor, determined according to NEMA MG 1, shall not exceed 50.

H. Sustained Short-Circuit Current: For a three-phase, bolted short circuit at system output terminals, the system will supply a minimum of 250 percent of rated full-load current for not less than 10 seconds and then clear the fault automatically, without damage to any generator system component.

2.4 SERVICE CONDITIONS

A. Environmental Conditions: Engine generator system withstands the following environmental conditions without mechanical or electrical damage or degradation of performance capability:

1. Ambient Temperature: 5 to 40 deg C.
2. Relative Humidity: 0 to 95 percent.
3. Altitude: Sea level to 1000 feet.

2.5 ENGINE

A. Comply with NFPA 37.

B. Fuel: Fuel oil, Grade DF-2.

C. Rated Engine Speed: 1800 rpm.

D. Lubrication System: Pressurized by a positive-displacement pump driven from engine crankshaft. The following items are mounted on engine or skid:

1. Filter and Strainer: Rated to remove 90 percent of particles 5 micrometers and smaller while passing full flow.
2. Thermostatic Control Valve: Controls flow in system to maintain optimum oil temperature. Unit is capable of full flow and is designed to be fail-safe.
3. Crankcase Drain: Arranged for complete gravity drainage to an easily removable container with no disassembly and without use of pumps or siphons or special tools or appliances.

E. Engine Fuel System: Comply with NFPA 37. System includes the following:

1. Main Fuel Pump: Mounted on engine. Pump ensures adequate primary fuel flow under starting and load conditions.
2. Relief/Bypass Valve: Automatically regulates pressure in fuel line and returns excess fuel to source.

F. Coolant Jacket Heater: Electric-immersion type, factory installed in coolant jacket system. Comply with NFPA 110 requirements for Level 1 equipment.

2.6 GOVERNOR

A. Type: Adjustable isochronous, with speed sensing.

2.7 ENGINE COOLING SYSTEM

A. Description: Closed loop, liquid cooled, with radiator factory mounted on engine generator-set skid and integral engine-driven coolant pump.

B. Radiator: Rated for specified coolant.

C. Coolant: Solution of 50 percent ethylene-glycol-based antifreeze and 50 percent water, with anticorrosion additives as recommended by engine manufacturer.

D. Temperature Control: Self-contained, thermostatic-control valve modulates coolant flow automatically to maintain optimum constant coolant temperature as recommended by engine manufacturer.

E. Coolant Hose: Flexible assembly with inside surface of nonporous rubber and outer covering of aging-, ultraviolet-, and abrasion-resistant fabric.

1. Rating: 50-psig maximum working pressure with 180 deg F coolant, and noncollapsible under vacuum.
2. End Fittings: Flanges or steel pipe nipples with clamps to suit piping and equipment connections.

F. Coolant piping external to engine generator set. Use ASTM B 88, Type L copper tubing with brazed joints, sized as recommended by diesel engine manufacturer. Refer to Division 15 Section "Basic Mechanical Materials and Methods" for basic piping installation and joint construction. Refer to Division 15 Section "Hydronic Piping" for materials and installation requirements for piping.

2.8 FUEL SUPPLY SYSTEM

A. Comply with NFPA 30 and NFPA 37.

B. Base-Mounted Fuel Oil Tank: Factory-installed and -piped, listed and labeled fuel oil tank. Features include the following:

1. Tank level indicator.
2. Capacity: Fuel for twenty four hours' continuous operation at 100 percent rated power output.

3. Vandal-resistant fill cap.
4. Double wall.
5. Leak detection and low level alarm.

C. Interior Fuel Oil Piping: As specified in Division 15 Section "Fuel Oil Piping."

2.9 ENGINE EXHAUST SYSTEM

A. Muffler: Residential type, sized as recommended by engine manufacturer. Measured sound level at a distance of 10 feet from exhaust discharge, is 95 dBA or less.

B. Connections from Engine to Exhaust System: Flexible section of corrugated stainless-steel pipe.

2.10 STARTING SYSTEM

A. Description: 12 or 24-V electric, with negative ground and including the following items:

1. Components: Sized so they will not be damaged during a full engine-cranking cycle with ambient temperature at maximum specified in "Environmental Conditions" Paragraph in "Service Conditions" Article above.
2. Cranking Motor: Heavy-duty unit that automatically engages and releases from engine flywheel without binding.
3. Cranking Cycle: As required by NFPA 110 for system level specified.
4. Cranking Cycle: 60 seconds.
5. Battery: Adequate capacity within ambient temperature range specified in "Environmental Conditions" Paragraph in "Service Conditions" Article above to provide specified cranking cycle at least twice without recharging.
6. Battery: Adequate capacity within ambient temperature range specified in "Environmental Conditions" Paragraph in "Service Conditions" Article above to provide specified cranking cycle at least three times without recharging.
7. Battery Cable: Size as recommended by generator set manufacturer for cable length indicated. Include required interconnecting conductors and connection accessories.
8. Battery Compartment: Factory fabricated of metal with acid-resistant finish and thermal insulation. Thermostatically controlled heater is arranged to maintain battery above 10 deg C regardless of external ambient temperature within range specified in "Environmental Conditions" Paragraph in "Service Conditions" Article above. Include accessories required to support and fasten batteries in place.
9. Battery-Charging Alternator: Factory mounted on engine with solid-state voltage regulation and 35-A minimum continuous rating.

2.11 CONTROL AND MONITORING

A. Functional Description: When the mode-selector switch on the control and monitoring panel is in the automatic position, remote-control contacts in one or more separate automatic-transfer switches initiate starting and stopping of the generator set. When the mode-selector switch is switched to the on position, the generator set manually starts. The off position of the same switch initiates generator-set shutdown. When the generator set is running, specified system or equipment failures or derangements automatically shut down the generator set and initiate alarms. Operation of a remote emergency-stop switch also shuts down the generator set.

B. Functional Description: Switching on-off switch on the generator control panel to the on position starts the generator set. The off position of the same switch initiates generator-set shutdown. When the generator set is running, specified system or equipment failures or derangements automatically shut down the generator set and initiate alarms.

C. Configuration: Operating and safety indications, protective devices, basic system controls, and engine gages are grouped on a common control and monitoring panel mounted on the generator set. Mounting method isolates the control panel from generator-set vibration.

D. Indicating and Protective Devices and Controls: Include the following:

1. AC voltmeter.
2. AC ammeter.
3. AC frequency meter.
4. DC voltmeter (alternator battery charging).
5. Engine-coolant temperature gage.
6. Engine lubricating-oil pressure gage.
7. Running-time meter.
8. Ammeter-voltmeter, phase-selector switch(es).
9. Generator-voltage adjusting rheostat.
10. Start-stop switch.
11. Overspeed shutdown device.
12. Coolant high-temperature shutdown device.
13. Coolant low-level shutdown device.
14. Oil low-pressure shutdown device.
15. Fuel tank derangement alarm.
16. Fuel tank high-level shutdown of fuel supply alarm.
17. Generator overload.

E. Supporting Items: Include sensors, transducers, terminals, relays, and other devices, and wiring required to support specified items. Locate sensors and other supporting items on engine, generator, or elsewhere as indicated. Where not indicated, locate to suit manufacturer's standard.

2.12 GENERATOR OVERCURRENT AND FAULT PROTECTION

A. Generator Circuit Breaker: Molded-case, electronic-trip type; 100 percent rated; complying with UL 489.

1. Tripping Characteristics: Adjustable long-time and short-time delay and instantaneous.
2. Trip Settings: Matched to generator thermal damage curve as closely as possible.
3. Shunt Trip: Connected to trip breaker when generator set is shut down by other protective devices.
4. Mounting: Adjacent to or integrated with control and monitoring panel.

B. Generator Protector: Microprocessor-based unit that continuously monitors current level in each phase of generator output, integrates generator heating effect over time, and predicts when thermal damage of the alternator will occur. When signaled by the protector or other generator-set protective devices, a shunt-trip device in the generator disconnect switch shall open the switch to disconnect the generator from the load circuits. Protector performs the following functions:

1. Initiates a generator overload alarm when the generator has operated at an overload equivalent to 110 percent of full-rated load for 60 seconds. Indication for this alarm is integrated with other generator-set malfunction alarms.
2. Under single or three-phase fault conditions, regulates the generator to 300 percent of rated full-load current for up to 10 seconds.
3. As heating effect on the generator of overcurrent approaches the thermal damage point of the unit, the protector switches the excitation system off, opens the generator disconnect switch, and shuts down the generator set.
4. Senses clearing of a fault by other overcurrent devices and controls recovery of rated voltage to avoid overshoot.

2.13 GENERATOR, EXCITER, AND VOLTAGE REGULATOR

A. Comply with NEMA MG 1 and specified performance requirements.

B. Drive: Generator shaft is directly connected to engine shaft. Exciter is rotated integrally with generator rotor.

C. Electrical Insulation: Class H or Class F.

D. Stator-Winding Leads: Brought out to terminal box to permit future reconnection for other voltages if required.

E. Construction prevents mechanical, electrical, and thermal damage due to vibration, overspeed up to 125 percent of rating, and heat during operation at 110 percent of rated capacity.

F. Excitation uses no slip or collector rings, or brushes, and is arranged to sustain generator output under short-circuit conditions as specified.

G. Enclosure: Dripproof.

H. Instrument Transformers: Mounted within generator enclosure.

I. Voltage Regulator: Solid-state type, separate from exciter, providing performance as specified.

1. Adjusting rheostat on control and monitoring panel provides plus or minus 5 percent adjustment of output- voltage operating band.

J. Windings: Two-thirds pitch stator winding and fully linked amortisseur winding.

K. Subtransient Reactance: 12 percent, maximum.

2.14 OUTDOOR GENERATOR-SET ENCLOSURE

A. Description: Vandal-resistant, weatherproof steel housing, wind resistant up to 100 mph. Multiple panels are lockable and provide adequate access to components requiring maintenance. Panels are removable by one person without tools. Instruments and control are mounted within enclosure.

B. Muffler Location: External to enclosure.

C. Engine Cooling Airflow through Enclosure: Adequate to maintain temperature rise of system components within required limits when unit operates at 110 percent of rated load for two hours with ambient temperature at top of range specified in system service conditions.

2.15 FINISHES

A. Outdoor Enclosures: Manufacturer's standard enamel over corrosion-resistant pretreatment and compatible standard primer.

2.16 SOURCE QUALITY CONTROL

A. Factory Tests: Include prototype testing and Project-specific equipment testing (testing of equipment manufactured specifically for this Project).

B. Prototype Testing: Performed on a separate engine generator set using same engine model, constructed of identical or equivalent components and equipped with identical or equivalent accessories.

1. Tests: Comply with those required for Level 1 energy converters in Paragraphs 3.2.1, 3.2.1.1, and 3.2.1.2 of NFPA 110.
2. Generator Tests: Comply with IEEE 115.
3. Components and Accessories: Items furnished with installed unit that are not identical to those on tested prototype have been tested to demonstrate compatibility and reliability.

C. Project-Specific Equipment Tests: Factory test engine generator set and other system components and accessories before shipment. Perform tests at rated load and power factor. Include the following tests.

1. Full load run.
2. Maximum power.
3. Voltage regulation.
4. Transient and steady-state governing.
5. Single-step load pickup.

PART 3 - EXECUTION

3.1 EXAMINATION

A. Examine areas, equipment foundations, and conditions, with Installer present, for compliance with requirements for installation and other conditions affecting packaged engine generator performance.

1. Proceed with installation only after unsatisfactory conditions have been corrected.

B. Examine roughing-in of cooling-system piping systems and electrical connections. Verify actual locations of connections before packaged engine generator installation.

3.2 INSTALLATION

A. Set packaged engine generator set on concrete bases.

1. Support generator-set mounting feet on rectangular metal blocks and shims or on metal wedges having small taper, at points near foundation bolts to provide 3/4- to 1-1/2-inch gap between pump base and foundation for grouting.
2. Adjust metal supports or wedges until generator is level.

B. Install packaged engine generator to provide access for periodic maintenance, including removal of drivers and accessories.

C. Install cooling-system piping, accessories, hangers and supports, and anchors for complete installation.

1. Extend drain piping from heat exchangers to point of disposition.

D. Install exhaust-system piping for diesel engines. Extend to point of termination outside structure. Size piping according to manufacturer's written instructions.

E. Electrical Wiring: Install electrical devices furnished by equipment manufacturers but not specified to be factory mounted.

1. Verify that electrical wiring is installed according to manufacturers' submittal and installation requirements in Division 26 Sections. Proceed with equipment startup only after wiring installation is satisfactory.

3.3 CONNECTIONS

A. Piping installation requirements are specified in Division 22 Sections. Drawings indicate general arrangement of piping and specialties. The following are specific connection requirements:

1. Install piping adjacent to packaged engine generator to allow service and maintenance.
2. Connect water supply to cooling system.
3. Connect cooling-system water supply and drain piping to diesel-engine heat exchangers. Install flexible connectors at connections to engine generator and remote radiator.
4. Connect exhaust-system piping to diesel engines.

B. Electrical wiring and connections are specified in Division 26 Sections.

C. Ground equipment.

1. Tighten electrical connectors and terminals according to manufacturer's published torque-tightening values. If manufacturer's torque values are not indicated, use those specified in UL 486A and UL 486B.

3.4 IDENTIFICATION

A. Identify system components according to Division 22 Section "Mechanical Identification" and Division 16 Section "Basic electrical Materials and Methods."

3.5 FIELD QUALITY CONTROL

A. Manufacturer's Field Service: Engage a factory-authorized service representative to inspect field-assembled components and equipment installation, including piping and electrical connections, and to assist in testing. Report results in writing.

B. Testing: Owner will engage a qualified testing agency to perform field quality-control testing.

C. Testing: Perform field quality-control testing under the supervision of the manufacturer's factory-authorized service representative.

D. Tests: Include the following:

1. Tests recommended by manufacturer.
2. InterNational Electrical Testing Association Tests: Perform each visual and mechanical inspection and electrical and mechanical test stated in NETA ATS for emergency engine generator sets, except omit vibration baseline test. Certify compliance with test parameters for tests performed.

3. Battery Tests: Measure charging voltage and voltages between available battery terminals for full-charging and float-charging conditions. Check electrolyte level and specific gravity under both conditions. Test for contact integrity of all connectors. Perform an integrity load test and a capacity load test for the battery. Verify acceptance of charge for each element of battery after discharge. Verify measurements are within manufacturer's specifications.
4. Battery-Charger Tests: Verify specified rates of charge for both equalizing and float-charging conditions.
5. System Integrity Tests: Methodically verify proper installation, connection, and integrity of each element of engine generator system before and during system operation. Check for air, exhaust, and fluid leaks.

E. Coordinate tests with tests for transfer switches and run them concurrently.

F. Retest: Correct deficiencies identified by tests and observations and retest until specified requirements are met.

G. Report results of tests and inspections in writing. Record adjustable relay settings and measured insulation resistances, time delays, and other values and observations. Attach a label or tag to each tested component indicating satisfactory completion of tests.

H. Test instruments shall have been calibrated within the last 12 months, traceable to standards of the National Institute for Standards and Technology, and adequate for making positive observation of test results. Make calibration records available for examination on request.

3.6 COMMISSIONING

A. Battery Equalization: Equalize charging of battery cells according to manufacturer's written instructions. Record individual cell voltages.

B. Contractor shall completely fill the fuel tank for start-up and then re-fill the tank prior to placing into service.

3.7 CLEANING

A. On completion of installation, inspect system components. Remove paint splatters and other spots, dirt, and debris. Repair damaged finish to match original finish. Clean components internally using methods and materials recommended by manufacturer.

3.8 DEMONSTRATION

A. Engage a factory-authorized service representative to train Owner's maintenance personnel to adjust, operate, and maintain packaged engine generators as specified below:

1. Coordinate this training with that for transfer switches.
2. Train Owner's maintenance personnel on procedures and schedules for starting and stopping, troubleshooting, servicing, and maintaining equipment.
3. Review data in maintenance manuals.
4. Schedule training with Owner, through Engineer, with at least seven days' advance notice.
5. Minimum Instruction Period: Eight hours.

END OF SECTION 263213

SECTION 333218 – SUBMERSIBLE NON-CLOG PUMP STATION

PART 1 - GENERAL

1.1 SCOPE OF WORK

A. Contractor shall furnish all material, equipment and incidentals required to construct a Submersible Pump Station with three (3) submersible non-clog wastewater pumps with slide rail systems, and coordinated control systems as hereinafter specified. Furnish wet well, valve vault, pumps, motor controls and other equipment as shown on the Drawings. The pump station shall be complete with pumps, slide rail systems, pumps, piping, valves, electrical work (including motor controls), structures, connections and appurtenances, tested and ready for operations.

1.2 REFERENCE STANDARDS

A. Design, manufacturing and assembly of elements of the equipment herein specified shall be accordance with the standards of the below listed organizations. Where reference is made to a standard of one of the following or other organizations, the version of the standard in effect at the time of the bid opening shall apply.

1. American Gear Manufacturing Association (AGMA)
2. American Institute of Steel construction (AISC)
3. American Iron and Steel Institute (AISI)
4. American Society of Mechanical Engineers (ASME)
5. American National Standards Institute (ANSI)
6. American Society for Testing Materials (ASTM)
7. American Water Works Association (AWWA)
8. American Welding Society (AWS)
9. Anti-Friction Bearing MANUFACTURERS Association (AFBMA)
10. Hydraulic Institute Standards
11. Institute of Electrical and Electronics Engineers (IEEE)
12. National Electrical Code (NEC)
13. National Electrical MANUFACTURERS Association (NEMA)
14. Occupational Safety and Health Administration (OSHA)
15. Steel Structures Painting Council (SSPC)
16. Underwriters Laboratories, Inc. (UL)

1.3 QUALIFICATIONS

A. The equipment covered by these Specifications shall be standard units of proven ability as manufactured by competent organizations having long experience in the production of such equipment. The pumps and panel shall be the standard cataloged product of **their** Manufacturer. The pumps furnished shall be designed, constructed and installed in accordance with the best practice and methods, and shall operate satisfactorily when installed. Pumps shall be manufactured in accordance with the Hydraulic Institute

Standards, except as otherwise specified herein.

B. All Equipment furnished under this Specification shall be new and unused and shall be the standard product of Manufacturers showing a successful record of manufacturing and servicing the equipment and systems specified herein for a minimum of five (5) years.

C. The Manufacturer shall be fully responsible for the design, arrangement and operation of all connected rotating components of the assembled pumping unit to ensure that neither harmful nor damaging vibrations occur within the specified operating range.

1.4 PERFORMANCE CRITERIA

A. Design Flow Rate: pumps shall be capable of providing the following flows at the noted head conditions. The pumps will either run as one, two or three pumps running at the same time pumping into a single force main depending on the flow conditions:

- 660 gpm @ 137 feet TDH
- 445 gpm @ 150 feet TDH
- 390 gpm @ 153 feet TDH
- 327 gpm @ 156 feet TDH
- 275 gpm @ 160 feet TDH
- 210 GPM @ 166 feet TDH

B. Pumps must be designed to handle raw, unscreened, domestic sanitary sewage. Pumps shall have 4" discharge connection. Each pump shall be selected to perform under following operating conditions:

Minimum Submergence Depth (FT)	1
Pump Efficiency	64%
Overall Efficiency	62%
Voltage	460
Phase	3
Frequency	60 HZ

1.5 SUBMITTALS

A. Copies of all materials required to establish compliance with the specifications shall be submitted in accordance with the provisions of Section 013000. The submittal format shall be in the form of a booklet, suitably tabbed and divided to cover at least the areas noted below for each major equipment item. The submittal booklet shall include adequate detail and sufficient information for the Engineer to determine that all of the equipment proposed meets the detailed requirements of the Specifications. Incomplete or partial submittals will not be reviewed. Submittals shall include at least the following:

1. Certified shop and erection drawings showing all important details of construction, dimensions and anchor bolt locations.

2. Descriptive literature, bulletins and/or catalogs of the equipment.

3. Data on the characteristics and performance of each pump. Data shall include guaranteed performance curves, based on actual shop tests of similar units, which show that they meet the specified requirements for head, capacity and horsepower. Curves shall be submitted on 8 ½" by 11" sheets, at as large a scale as is practical. Catalog sheets showing a family of curves will not be acceptable.

4. A complete total bill of materials of all equipment (may be furnished with Operation and Maintenance manuals specified under paragraph 1.5).

5. A list of the Manufacturer's recommended spare parts, in addition to those specified, with the manufacturer's current price for each item, shall be supplied. Include gaskets, packing, etc. on the list. List bearings by the bearings manufacturer's numbers only.

6. Complete motor data.

7. Complete control system data including inner door and back panel layout Drawings and component detail.

B. A copy of this specification section and all referenced and applicable sections, with addendum updates included and with each paragraph check-marked to indicate specification compliance or marked to indicate requested deviations from specification requirements is required under this section. Check marks (✓) shall denote full compliance with a paragraph as a whole. If deviations from the specifications are indicated, and therefore requested by the Contractor, each deviation shall be underlined and denoted by a number in the margin to the right of the identified paragraph, referenced to a detailed written explanation of the reasons for requesting the deviation. The Engineer shall be the final authority for determining acceptability of requested deviations. The remaining portions of the paragraph not underlined will signify compliance on the part of the Contractor with the specifications. Failure to include a copy of the marked-up specification sections, along with justification(s) for any requested deviations to the specification requirements, with the submittal shall be sufficient cause for rejection of the entire submittal with no further consideration.

C. Test Reports to be Submitted:

1. A schedule of the date of shop testing and delivery of the equipment to the job site.

2. Description of pump factory test procedures and equipment.

3. Copies of all tests results, as specified.

D. Complete operating and maintenance instructions shall be furnished for all equipment included under these specifications. The maintenance instructions shall include trouble shooting data and full preventative maintenance schedules and complete spare parts lists with ordering information.

E. Submit the Manufacturer's Certificate of Installation, Testing and Instruction.

F. In the event that it is impossible to conform with certain details of the specifications due to different manufacturing techniques, describe completely all non-conforming aspects.

1.6 CLOSEOUT SUBMITTALS

A. Section 017000 – Execution and Closeout Requirements: Requirements for closeout submittals.

B. Project Record Documents: Record actual locations of packaged pumping stations, including basins and control panel.

C. Submit executed certification of pumping stations after performance testing.

D. Operation and Maintenance Data: Submit operating and maintenance for pumping station and schedule of recommended maintenance..

PART 2- PRODUCTS

2.1 MANUFACTURERS

A. Available Manufacturers: Subject to compliance with requirements, manufacturers offering submersible non-clogging pumps which may be incorporated in the work include, but are not limited to, the following:

1. Pumps, Control Panel and Liquid Level System

a. Flygt Corporation
b. KSB
c. Pentair – Fairbanks Nijhuis

2.2 GENERAL

A. The equipment covered by these Specifications shall be standard units of proven ability as manufactured by reputable concerns having long experience in the production of such equipment. The equipment furnished shall be designed, constructed, and installed in accordance with the best practice and methods, and shall operate satisfactorily when installed as shown on the Drawings.

B. All equipment shall be designed and built for 24-hour continuous service at any and all points within the specified range of operation, without overheating, without cavitation, and without excessive vibration or strain.

C. The pumping units required under this section shall be complete. All parts shall be so designed and proportioned as to have liberal strength, stability, and stiffness and to be especially adapted for the service to be performed. Ample room for inspection, repairs and adjustment shall be provided.

D. Stainless steel nameplates giving the name of the Manufacturer, the rated capacity, head,

speed and all other pertinent data shall be attached to each pump, motor, and control panel.

E. All working parts of the pumps and motors, such as bearings, wearing rings, shaft, sleeves, etc., shall be standard dimensions built to limit gauges or formed to templates, such that parts will be interchangeable between like units and such that the Owner may, at any time in the future, obtain replacement and repair parts for those furnished in the original machines.

F. The nameplate ratings of the motors shall not be exceeded, nor shall the design service factor be reduced when the pump is operating at any point on its characteristic curve at maximum speed.

G. Mechanical equipment, including drives and electric motors shall be supplied and installed in accordance with applicable OSHA regulations. Stainless steel guards shall be installed on all rotation assemblies.

H. All lubrication fittings shall be brought to the outside of all equipment so that they are readily accessible from the outside without the necessity of removing covers, plates, housings, or guards.

2.3 ALUMINUM ACCESS COVER (WET WELLS AND VALVE VAULTS)

A. Access hatch shall be watertight construction, handles and hinges shall be constructed to provide for watertight construction.

B. Door leaf shall be 1/4" aluminum diamond pattern plate to withstand a live load of 300 lb/ft^2 with a maximum deflection of 1/150th of the span.

C. Channel frame shall be 1/4" aluminum with an anchor flange around the perimeter and have a minimum cross sectional area of 7-1/2 $in.^2$ with a drainage trough. Pipe shall run from drainage trough to the sump and/or floor. Neoprene gaskets shall be installed at frame.

D. Hardware: Hardware shall be Type 316 stainless steel throughout.

1. Heavy forged hinges having 3/8" minimum diameter pins and pivots.
2. Compression spring operators enclosed in telescopic tubes. Operators shall provide for easy and controlled door operation throughout the entire area of opening and closing. Operation shall not be affected by temperature.
3. Heavy hold-open arm with release handle. Hold-open arm shall automatically lock door in a vertical position.
4. Handle-to pull open leaf door.

E. Finishes of the access hatch shall be as follows:

1. Aluminum door leaf shall be clear anodized.
2. Exterior of aluminum frame, where contact with concrete is made, shall be applied with a bituminous coating.
3. Comply with NAAMM "Metal Finishes Manual" for recommendations relative to applying and designating finishes.
4. Finish designations prefixed by AA conform to the system established by the Aluminum Association for designating aluminum finishes.

5. Class I, Clear Anodic Finish: AA-M12C22A41 (Mechanical Finish: nonspecular as fabricated; Chemical Finish: etched, medium matte; Anodic Coating: Architectural Class I, clear coating 0.7 mil (0.018 mm or thicker) complying with AAMA 607.1.

2.4 REQUIREMENTS

A. Furnish and install three (3) submersible non-clog wastewater pump(s). Each pump shall be equipped with a 34.0 HP submersible electric motor connected for operation on 460 volts, 3 phase, 60 hertz, 4 wire service, with 30 feet of submersible cable (SUBCAB) suitable for submersible pump applications. The power cable shall be sized according to NEC and ICEA standards and have P-MSHA Approval. The pump shall be supplied with a mating cast iron 4" discharge connection and be capable of delivering 390 GPM at 153.1' TDH. Shut-off head shall be 223 feet (minimum). Each pump shall be fitted with 30 feet of stainless steel lifting chain or stainless steel cable. The working load of the lifting system shall be 50% greater than the pump unit weight. **The basis of design pumps are Flygt (Xylem) NP 3171 HT 452.**

2.5 PUMP DESIGN

A. The pumps shall be automatically and firmly connected to the discharge connection, guided by no less than two guide bars extending from the top of the station to the discharge connection. There shall be no need for personnel to enter the wet-well. Sealing of the pumping unit to the discharge connection shall be accomplished by a machined metal to metal watertight contact. Sealing of the discharge interface with a diaphragm, O-ring or profile gasket will not be acceptable. No portion of the pump shall bear directly on the sump floor.

2.6 PUMP CONSTRUCTION

A. Major pump components shall be of grey cast iron, ASTM A-48, Class 35 B, with smooth surfaces devoid of blow holes or other irregularities. All exposed nuts or bolts shall be AISI type 304 stainless steel construction. All metal surfaces coming into contact with the pumpage, other than stainless steel or brass, shall be protected by a factory applied spray coating of acrylic dispersion zinc phosphate primer with a polyester resin paint finish on the exterior of the pump.

B. Sealing design shall incorporate metal-to-metal contact between machined surfaces. Critical mating surfaces where machined surfaces. Critical mating surfaces where watertight sealing is required shall be machined and fitted with Nitrile or Viton rubber O-rings. Fittings will be the result of controlled compression of rubber O-rings in two planes and O-ring contact of four sides without the requirement of a specific torque limit.

C. Rectangular cross sectioned gaskets requiring specific torque limits to achieve compression shall not be considered as adequate or equal. No secondary sealing compounds, elliptical O-rings, grease or other devices shall be used.

2.7 COOLING SYSTEM

A. Motors are sufficiently cooled by the surrounding environment or pumped media. A water jacket is not required.

2.8 CABLE ENTRY SEAL

A. The cable entry seal design shall preclude specific torque requirements to insure a watertight and submersible seal. The cable entry shall consist of a single cylindrical elastomer grommet, flanked by washers, all having a close tolerance fit against the cable outside diameter and the entry inside diameter and compressed by the body containing a strain relief function, separate from the function of sealing the cable. The assembly shall provide ease of changing the cable when necessary using the same entry seal. The cable entry junction chamber and motor shall be separated by a stator lead sealing gland or terminal board, which shall isolate the interior from terminal board, which shall isolate the interior from foreign material gaining access through the pump top. Epoxies, silicones, or other secondary sealing systems shall not be considered acceptable.

2.9 MOTOR

A. The pump motor shall be a NEMA B design, induction type with a squirrel cage rotor, shell type design, housed in an air filled, watertight chamber. The stator windings shall be insulated with moisture resistant Class H insulation rated for 180°C (356°F). The stator shall be insulated by the trickle impregnation method using Class H monomer-free polyester resin resulting in a winding fill factor of at least 95%. The stator shall be heat -shrink fitted into the cast iron stator housing. The use of multiple step dip and bake-type stator insulation process is not acceptable. The use of bolts, pins or other fastening devices requiring penetration of the stator housing is not acceptable. The use of bolts, pins or other fastening devices requiring penetration of the stator housing is not acceptable. The motor shall be designed for continuous duty handling pumped media of 40°C (104°F) and capable of up to 30 evenly spaced starts per hour. The rotor bars and short circuit rings shall be made of cast aluminum. Thermal switches set to open at 125°C (260°F) shall be embedded in the stator lead coils to monitor the temperature of each phase winding. These thermal switches shall be used in conjunction with and supplemental to external motor overload protection and shall be connected to the control panel. The junction chamber containing the terminal board, shall be hermetically sealed from the motor by an elastomer compression seal. Connection between the cable conductors and stator leads shall be made with threaded compression type binding post permanently affixed to a terminal board. The motor and the pump shall be produced by the same manufacturer.

B. The combined service factor (combined effect of voltage, frequency and specific gravity) shall be a minimum of 1.15. The motor shall have a voltage tolerance of plus or minus 10%. The motor shall be designed for operation up to 40°C (104°F) ambient and with a temperature rise not to exceed 80°C. A performance chart shall be provided upon request showing curves for torque, current power factor, input/output kW and efficiency. This

chart shall also include data on starting and no-load characteristics. The motor horsepower shall be adequate so that the pump is non-overloading throughout the entire pump performance curve from shut-off through run-out. The motor shall be capable of continuous submergence underwater without loss of watertight integrity to a depth of 65 feet or greater.

C. The power cable shall be sized according to the NEC and ICEA standards and shall be of sufficient length to reach the junction box without the need of any splices. The power cable shall be of a shielded design in which an overall tinned copper shield is included and each individual phase conductor is shielded with an aluminum coated foil wrap. The outer jacket of the cable shall be oil resistant chlorinated polyethylene rubber. The cable shall be capable of continuous submergence underwater without loss of watertight integrity to a depth of 65 feet or greater.

2.10 BEARINGS

A. The pump shaft shall rotate on two bearings. Motor bearings shall be permanently grease lubricated. The upper bearing shall be a single deep groove ball bearing. The lower bearing shall be a two row angular contact bearing to compensate for axial thrust and radial forces. Single row lower bearings are not acceptable.

2.11 MECHANICAL SEAL

A. Each pump shall be provided with a tandem mechanical shaft seal system consisting of two totally independent seal assemblies. The seals shall operate in a lubricant reservoir that hydrodynamically lubricates the lapped seal faces at a constant rate. The lower, primary seal unit, located between the pump and the lubricant chamber, shall contain one stationary and one positively driven rotating, corrosion resistant tungsten-carbide ring. The upper, secondary seal unit, located between the lubricant chamber and the motor housing, shall contain one stationary and one positively driven rotating, corrosion resistant tungsten-carbide seal ring. Each seal interface shall be held in contact by its own spring system. The seals shall require neither maintenance nor adjustment nor depend on direction of rotation for sealing. The position of both mechanical seals shall depend on the shaft. Mounting of the lower mechanical seal on the impeller hub will not be acceptable. For special applications, other seal face materials shall be available.

B. The following seal types shall not be considered acceptable nor equal to the dual independent seal specified: shaft seals without positively driven rotating members, or conventional double mechanical seals containing either a common single or double spring acting between the upper and lower seal faces. No system requiring a pressure differential to offset pressure and to effect sealing shall be used.

C. Each pump shall be provided with a lubricant chamber for the shaft sealing system. The lubricant chamber shall be designed to prevent overfilling and to provide lubricant expansion capacity. The drain and inspection plug, with positive anti-leak seal shall be easily accessible from the outside. The seal system shall not rely upon the pumped media for lubrication. **The motor shall be able to operate dry without damage while pumping under load.**

D. Seal lubricant shall be FDA - Approved, nontoxic.

2.12 PUMP SHAFT

A. Pump and motor shaft shall be the same unit. The pump shaft is an extension of the motor shaft. Couplings shall not be acceptable. The pump shaft shall be stainless steel, ASTM a479 S43100-T.

B. If a shaft material of lower quality than stainless steel, ASTM A479 S431000-T, is used, a shaft sleeve of stainless steel (ASTM A479 S431000-T) is used to protect the shaft material. However, shaft sleeves only protect the shaft around the lower mechanical seal. No protection is provided for in the oil housing and above. Therefore, the use of stainless steel sleeves will not be considered equal to stainless steel shafts.

2.13 IMPELLER

A. The impeller(s) shall be cast of (ASTM A-48, Class 35B gray iron or ASTM A-532 (Alloy III A) 25% chrome cast iron), dynamically balanced, semi-open, multi-vane, back-swept, non-clog design. The impeller vane leading edges shall be mechanically self-cleaned upon each rotation as they pass across a spiral groove located on a replaceable insert ring.

B. (The ASTM A-48, Class 35B gray iron impeller(s) shall have vanes hardened to Rc 45 or The ASTM A-532 (Alloy III A) 25% chrome cast iron impeller shall have a hardness of Rc 55) and shall be capable of handling solids, fibrous materials, heavy sludge and other matter found in waste water. The screw shape of the impeller inlet shall provide an inducing effect for the handling of sludge and rag-laden wastewater. The impeller shall be capable of momentarily moving axially upwards a distance of 15mm/0.6-in. to allow larger debris to pass through and immediately return to normal operating position.

2.14 VOLUTE/SUCTION COVER

A. The pump volute shall be a single piece gray cast iron, ASTM A-48, Class 35B, non-concentric design with smooth passages of sufficient size to pass any solids that may enter the impeller. Minimum inlet and discharge size shall be as specified. The volute shall have a replaceable suction cover insert ring in which are cast spiral-shaped, sharp-edged groove(s). The spiral groove(s) shall provide trash release pathways and sharp edge(s) across which each impeller vane leading edge shall cross during rotation so to remain unobstructed. The insert ring shall have a guide pin integral to the casting and shall be cast of (ASTM A-48, Class 35B gray iron or ASTM A-532 (Alloy III A) 25% chrome cast iron) and provide effective sealing between the multi-vane semi-open impeller and the volute housing.

2.15 PROTECTION

A. All stators shall incorporate thermal switches in series to monitor the temperature of each phase winding. The thermal switches shall open at 125°C (260°F), stop the motor and activate an alarm.

B. A leakage sensor shall be available as an option to detect water in the stator chamber. The Float Leakage Sensor (FLS) is a small float switch used to detect the presence of water in the stator chamber. When activated, the FLS will stop the motor and send an alarm both local and/or remote. **Use of voltage sensitive solid state sensors and trip temperature above 125°C (260°F) shall not be allowed.**

C. The thermal switches and FLS shall be connected to a Mini CAS (Control and Status) monitoring unit. The Mini CAS shall be designed to be mounted in any control panel.

2.16 LIFTING-CHAIN AND HOIST

A. Each pump shall be provided with the required length of stainless steel lifting chain which shall have a working load 50% greater than the pump unit weight.

B. Provide a pump lifting hoist unit, including platform socket, with wench and cable adequately sized to accommodate a safe load of 2000 lbs. and designed to completely remove the submersible pumps as detailed on the design drawings.

2.17 STATION SUMP PUMP

A. This project was designed based on the following manufacturer Zoeller Engineered Products Model 6282 sump pump "basis-of-design product".

B. Submersible non clogging vortex pump with built in float switch.

C. ½ HP, 120 Volt, Single phase, 60Hz, 1750 RPM, Class B insulation, 6.6 Amps

D. 2" NPT discharge.

E. 2" spherical solids handling capacity.

F. 82 GPM @ 12 foot TDH.

G. Contractor to provide cable from pump to control panel.

2.18 CHECK VALVES

A. Refer to Section 4000565.23 – Swing Check Valves.

2.19 ELECTRICAL COMPONENTS

A. Panel Enclosure

1. The pump controls shall be contained in a NEMA type 4X enclosure manufactured of 304 stainless steel. A painted steel back panel shall be provided in the control enclosure to mount circuit breakers, starters, relays and other control equipment. The enclosure shall contain a full inner-door for mounting lights and switches and to protect the operator from high voltage.

2. The incoming power shall be 480 volts, 3 phase, 60 hertz. The control voltage shall be 115 volts, 1 phase, 60 hertz. A control transformer shall be provided in the control panel to provide 115 volt control power when necessary. The transformer must be properly sized to handle the maximum load of the control and accessories. .

3. The control panel shall contain terminals for field wiring of the utility power, pump motor(s), pump sensors and level control equipment. They shall be sized per NEC requirements and shall be as manufactured by Marathon Products, Inc. or equal .

4. Circuit breakers shall be provided for each pump. A separate circuit breaker shall be provided for the control circuit. All circuit breakers shall be thermal magnetic type and be sized per NEC requirements unless otherwise specified. Separate control and alarm fuses must be provided in the control panel as required. Spare fuses shall be supplied for each type and quantity used.

5. A lightning arrestor must be provided to protect the pumps and controls from power surges and lightning strikes. The unit must be wired to the incoming power terminals of the control panel. The lightning arrestor shall be model #SDSA3650 as manufactured by Square D or engineer approved equal.

6. A properly sized IEC rated starter shall be provided for each pump. Definite purpose contactors with overload shall not be acceptable. The overload shall be Class10 ambient compensated type rated and shall be capable of being manually reset. The starters shall be "XT" series as manufactured by Cutler-Hammer or equal.

7. A solid-state alternator, as manufactured by Ohio Electric Control, Inc., shall be provided to alternate pumps on each pumping cycle. The control shall include circuitry that will start the second or lag pump if the inflow is greater than one pump can handle. In this instance, both pumps shall run until the level drops below the "off" point.

8. The control panel will be operated by a submersible level transducer located in the wetwell. The system shall use the Dwyer MPC Junior pump controller to receive a 4-20ma signal from the transducer and start and stop the pumps. The controller shall be programmed to alternate the pumps on each pumping cycle and be able to start the second or lag pump if the inflow is greater than one pump can handle. In this instance, both pumps shall run until the level drops below the "off" level. The pump controller shall have the following features:

   a. UL type 4X rated Indoor Front Panel
   b. 120vAC Power Requirement
   c. Analog Input (4-20ma) for Transducer
   d. 2 SPDT Relay Outputs for Control
   e. 2 SPST Relay Outputs for Alarm

   f. Two 4-digit, 7-segment LED Display

g. Nonvolatile Memory Back-up

Upon high level, the pumps shall be locked out until the level drops below the alarm shut off point. The pumps will restart automatically.

9. A submersible type transducer shall be provided and shall provide a 4-20ma signal to the controller. The unit shall be surrounded by a 316 stainless steel cage so that it can be placed on the bottom of the wet well and be fully protected. The use of a stilling tube will not be acceptable. The transducer shall come equipped with 40ft of cable or as required by the application and be rated for hazardous locations. The unit shall be the Birdcage model as manufactured by Blue Ribbon Corporation, Dwyer Instrument or equal.

10. The back-up level control will be by four (4) float switches located in the wet well. The levels will correspond as follows:

    a. Both Pumps Off
    b. Lead Pump On
    c. Lag Pump On
    d. High Level
    e. The floats switches shall be PK series with weights as manufactured by Ohio Electric Control, Inc. or equal. The floats shall be mounted inside the wet well by a stainless steel float bracket, Model #100-4SS as manufactured by Ohio Electric Control, Inc.

11. A separate run light and hand-off-auto switch shall be provided for each pump. The lights and switches must be mounted to the full inner-door. A separate on-off-test switch shall be provided to test the high level alarm. All lights and switches shall be Heavy-Duty (22mm) oil-tight, as manufactured by Idec.

12. A separate elapsed time meter shall be provided for each pump and must be mounted to the full inner-door. The meters shall display pump run time in minutes and shall be as manufactured by Redington or equal.

13. Each pump shall contain sensors for over-temperature and stator housing moisture. The heat sensor shall stop the corresponding pump based upon the pump manufacturer's temperature requirements. The pump shall restart automatically when it cools. A probe in the pump shall detect moisture leakage into the pump stator housing. Relays in the control panel shall work in conjunction with the probes to detect moisture in the pump. Upon occurrence of moisture in the pump seal, an indicator light in the control panel shall be illuminated. The lights shall be Heavy-Duty (22mm) oil-tight, as manufactured by Idec. The probe sensing relays shall be type as required by the pump manufacturer.

14. Upon an overload trip of the pump motor, a separate indicator light, mounted to the enclosure door, shall illuminate. The indicator shall be Heavy-Duty (22mm) LED oil-tight, as manufactured by Idec.

15. A visual flashing alarm shall be mounted to the top, exterior of the control panel. The alarm shall contain a lexan lens and provide bulb replacement without removal of the

lens from the control panel. The visual alarm must be rated NEMA 4X and shall be one as manufactured by Ohio Electric Control, Inc. The visual alarm shall be initiated by a level rise in the wetwell above the "high" level float or transducer set point.

16. The control shall be provided with connections for monitoring following station alarm/status points:

    a. High Level Alarm (dry contacts)
    b. Pump Fail Alarm (dry contacts)
    c. Seal Fail Alarm (dry contacts)
    d. Heat Sensor Alarm (dry contacts)

17. A phase/voltage monitor must be provided to protect the pumps and controls from low voltage, phase loss and phase reversal. The unit must be model #PMPU as manufactured by Macromatic.

18. Each component mounted on the inner-door will be labeled with a plastic engraved nameplate. The back panel will be labeled with laminated paper labels.

19. All wiring shall be sized according to NEC/UL and shall be placed in plastic wireway or similar devices.

20. Spare fuses shall be provided for each type and quantity provided in the controlpanel.

21. Shop Drawings and Submittal Information shall include the following:

    a. Electrical Schematics with:
    b. Sequence of Operations
    c. Bill of Materials
    d. Manufacturers Component Catalog Sheets
    e. A laminated "as-built" electrical schematic shall be mounted inside the electrical panel enclosure door.

22. The control panel must comply with the National Electric Code including a listing of the panel short circuit protection. The panel shall be "UL 508" listed and labeled.

23. All equipment shall be installed, configured, interconnected, and commissioned by qualified persons, in accordance with the manufacturer's instructions and guidelines, and in compliance with all governing regulations and accepted engineering practices.

24. The manufacturer shall warrant the equipment described herein, to be free of defects in materials and workmanship, for a period of twelve (12) months from the date of shipment from the manufacturer. The manufacturer's liability shall be limited to the repair or replacement of the materials supplied, free of charge F.O.B. the manufacturers facility. Other limitations may apply. Contact the manufacturer for complete warranty details.

B. Branch Components

1. All motor branch and power circuit components shall be of highest industrial quality. The short circuit current rating of all power circuit devices shall be a tested

combination or evaluated per the National Electrical Code Article 409. The lowest rated power circuit component shall be the overall control panel short circuit rating and shall not be less than the fault current available. The minimum control panel rating shall not be less than 10 Ka, rms symmetrical. Control assemblies operating at 120 volts nominal or less may be provided with transformers which limit the fault current and may be rated less than the minimum required short circuit rating.

2. Circuit Breakers and Operating Mechanisms

   a. A properly sized heavy duty circuit breaker shall be furnished for each pump motor. The circuit breakers must be sealed by the manufacturer after calibration to prevent tampering.

   b. An operating mechanism installed on each motor circuit breaker shall penetrate the control panel door. A padlockable operator handle shall be secured on the exterior surface. Interlocks must prevent opening the door until circuit breakers are in "OFF" position. An additional mechanism(s) shall be provided on the circuit breaker permitting the breaker to be operated and/or locked with the control panel door in the open position.

3. Pump Start Relays

   a. Provide relays to delay the starting of pumps based on the following:

      1) Pump #1 – 0 delay
      2) Pump #2 – 10 second delay

   b. This is required in case of loss of power and starting of the emergency generator. Refer to Sheet E1.

4. Phase Monitor

   a. The control panels shall be equipped to monitor the incoming power and shut down the pump motors when required to protect the motor(s) from damage caused by phase reversal, phase loss, high voltage, low voltage, and voltage unbalance. An adjustable time delay shall be provided to minimize nuisance trips. The motor(s) shall automatically restart, following an adjustable time delay, when power conditions return to normal.

5. Transient Voltage Surge Suppressor

   a. The control panel shall be equipped with a transient voltage surge suppressor to minimize damage to the pump motors and control from transient voltage surges. The suppressor shall utilize thermally protected silicon-oxide varistors encapsulated in a non-conductive housing. Mechanical indicators shall be provided on each phase to indicate protection has been lost. The suppressor shall have a surge current rating of 100,000 Amps per phase and a 100Ka interrupting rating

6. Voltage Alert Indication

a. The control panel shall include a voltage alert indicator to reduce the risk of electrical arc flash by pre-verifying the electrical isolation from outside of the control panel. Hardwired to the main incoming point of termination, the indicator shall be powered by the same voltage that it indicates utilizing redundant circuitry, thereby flashing whenever voltage is present. An eight detector display shall visually alert the presence of dangerous AC or DC potentials occurring between any combinations of the monitored input lines.

C. Control Circuit

1. A normal duty thermal-magnetic circuit breaker shall protect all control circuits by interrupting control power.

2. Pump mode selector switches shall permit manual start or stop of each pump individually, or permit automatic operation under control of the liquid level control system. Manual operation shall override all shutdown systems, except the motor overload relays. Selector switches to be heavy duty, oil-tight design with contacts rated NEMA A300 minimum.

3. Pump alternation shall be integral to the liquid level controller. Provisions for automatic alternation or manual selection shall also be integral to the liquid level controller.

4. Six digit elapsed time meter shall be shall be displayed.

5. A high pump temperature protection circuit shall override the level control and shut down the pump motor(s) when required to protect the pump from excessive temperature. An indicator light will be lit indicating the motor stopped due to high pump temperature. The motor shall remain locked out until the pump has cooled and circuit has been manually reset. Automatic reset of this circuit is not acceptable.

6. A moisture protection circuit shall override the level control and shut down the pump motor(s) when required to protect the pump from excessive temperature. An indicator light will be lit indicating the motor stopped due to high pump temperature. The motor will remain locked out until the pump has cooled and circuit has been manually reset. Automatic reset of this circuit is not acceptable.

7. A duplex ground fault receptacle providing 115 VAC, 60 Hz, single phase current, will be mounted on the side of the control enclosure. Receptacle circuit shall be protected by a 15 ampere thermal-magnetic circuit breaker.

8. The panel shall be equipped with a 3 KVA stepdown transformer to supply 115 volt, AC, single phase for the control and auxiliary equipment. The primary and secondary side of the transformer to be protected by a thermal magnetic circuit breaker, sized to meet the power requirements of the transformer. An operating mechanism shall penetrate the control panel door and a padlockable operator handle shall be secured on the exterior surface. Interlocks must prevent opening the door until circuit breakers are in "OFF" position. An additional mechanism(s) shall be provided on the circuit breaker permitting the breaker to be operated and/or locked with the control panel door in the open position.

9. Wiring

   a. All wiring, workmanship, and schematic wiring diagrams shall comply with applicable standards and specifications of the National Electric Code (NEC).

   b. All user serviceable wiring shall be type MTW or THW, 600 volts, color coded as follows:

      1) Line and Load Circuits, AC or DC power.....Black
      2) AC Control Circuit Less Than Line Voltage.....Red
      3) DC Control Circuit.....Blue
      4) Interlock Control Circuit from external source.....Yellow
      5) Equipment Grounding Conductor.....Green
      6) Current Carrying Ground.....White
      7) Hot With Circuit Breaker Open.....Orange

   c. Control circuit wiring inside the panel, with exception of internal wiring of individual components, shall be 16 gauge minimum, type MTW or THW, 600 volts. Power wiring to be 14 gauge minimum. Motor branch wiring shall be 10 gauge minimum.

   d. Motor branch and other power conductors shall not be loaded above the temperature rating of the connected termination. Wires must be clearly numbered at each end in conformance with applicable standards. All wire connectors in the control panel shall be ring tongue type with nylon insulated shanks. All wires on the sub-plate shall be bundled and tied. All wires extending from components mounted on door shall terminate at a terminal block mounted on the back panel. All wiring outside the panel shall be routed through conduit.

   e. Control wires connected to door mounted components must be tied and bundled in accordance with good commercial practice. Bundles shall be made flexible at the hinged side of the enclosure. Adequate length and flex shall allow the door to swing full open without undue stress or abrasion. Bundles shall be held on each side of hinge by mechanical fastening devices.

10. Grounding

   a. The contractor shall provide an earth driven ground connection to the pump station at the main grounding lug in accordance with the National Electric Code (NEC).

11. Equipment Marking

   a. Permanent corrosion resistant name plate(s) shall be attached to the control and include following information:

      1) Equipment serial number
      2) Control panel short circuit rating
      3) Supply voltage, phase and frequency
      4) Current rating of the minimum main conductor
      5) Electrical wiring diagram number

6) Motor horsepower and full load current
7) Motor overload heater element
8) Motor circuit breaker trip current rating
9) Name and location of equipment manufacturer

b. Control components shall be permanently marked using the same identification keys shown on the electrical diagram. Labels shall be mounted adjacent to device being identified.

c. Switches, indicators, and instruments mounted through the control panel door shall be labeled to indicate function, position, etc. Labels shall be mounted adjacent to, or above the device.

2.20 LIQUID LEVEL CONTROL

A. The manufacturer of the liquid level control system must be ISO 9001:2008 revision certified, with scope of registration including design control and service after sales activities.

B. The manufacturer of the liquid level control system must be ISO 9001:2000 revision certified, with scope of registration including design control and service after sales activities.

C. The level control system shall start and stop the pump motors in response to changes in wet well level, as set forth herein.

D. The level control system shall operate as a submersible transducer type system.

E. The level control system shall utilize alternation to select first one pump, then the second pump, then the third pump to run as lead pump for a pumping cycle. Alternation shall occur at the end of a pumping cycle, or in the event of excessive run time.

F. The level control system shall utilize an electronic pressure switch which shall continuously monitor the wet well level, permitting the operator to read wet well level at any time. Upon operator selection of automatic operation, the electronic pressure switch shall start the motor for one pump when the liquid level in the wet well rises to the "lead pump start level". When the liquid is lowered to the "lead pump stop level", the electronic pressure switch shall stop this pump. These actions shall constitute one pumping cycle. Should the wet well level continue to rise, the electronic pressure switch shall start the second and/or third pump (if required) when the liquid reaches the "lag pump start level", or "standby pump start level" so that all pumps are operating. These levels shall be adjustable.

G. Panel manufacturer will supply one 115 volt AC alarm light fixture with vapor-tight red globe, guard, conduit box, and mounting base. The design must prevent rain water from collecting in the gasketed area of the fixture, between the base and globe. The alarm light will be shipped loose for installation by the contractor.

H. Panel manufacturer will supply one 115 volt AC weatherproof alarm horn with projector, conduit box, and mounting base. The design must prevent rain water from collecting in any part of the horn. The alarm horn will be shipped loose for installation by the contractor.

I. Triplex Control Sequence:

1. As basin liquid level increases to Elevation 1676, LEAD PUMP START switch energizes lead pump.
2. When basin liquid level decreases to Elevation 1675, PUMPS STOP switch de-energizes lead pump.
3. When lead pump is de-energized, alternating relay indexes such that lag # 1 or lag # 2 pump starts on next rise in basin liquid level.
4. If basin liquid level continues to rise to Elevation 1677, LAG PUMP #1 START switch energizes lag pump #1.
5. When basin liquid level decreases to Elevation 1675, LEAD PUMP #1 STOP switch de-energizes both pumps.
6. If basin liquid level continues to rise to Elevation 1678, LAG PUMP #2 START switch energizes lag pump.
7. When basin liquid level decreases to Elevation 1675, LEAD PUMPS STOP switch de-energizes all three pumps.
8. If basin liquid level continues to rise, HIGH LEVEL alarm switch energizes alarm signal when liquid level reaches Elevation 1678.50.
9. The sump pump will be controlled manually with a switch in the control panel. It shall have a built-in float to control it when energized. It is only to empty the final foot of water in the basin.

2.21 REMOTE MONITORING SYSTEM INTERFACE

A. A dedicated terminal strip will provide the following status and alarm contacts for the future SCADA system. Digital status contacts shall be N.O. dry contacts. Analog outputs shall be surge protected 4-20 mA signals.

1. Pump 1 running
2. Pump 2 running
3. Pump 3 running
4. Pump 1 any fault
5. Pump 2 any fault
6. Pump 3 any fault
7. Utility power fault
8. Digital high water alarm
9. Digital low water alarm
10. Analog wet well level as 4-20 mA

2.22 HAZARDOUS LOCATION COMPLIANCE

A. The wet well and the area within 2 feet of the wet well has been classified as a Class 1, Division 1, "Hazardous Location" as defined by the National Electrical Code. All electric wiring and motors located within the subject area shall be in strict compliance with these standards. The shop drawings carry the manufacturer's certification that all equipment

located in the subject area meets the requirements of NEC Class 1, Division 1 Criteria and the Underwriter's Laboratory (UL).

2.23 MISCELLANEOUS

A. A final as built drawing, laminated in Mylar, shall be attached to the inside of the front door. A list of all legends shall be included.

B. All component parts in the control panel shall be permanently marked and identified as they are indicated on the drawing. Marking shall be on the back plate adjacent to the component. All control conductors shall be identified with wire markers at each end as close as practical to the end of conductor.

C. All panels shall be tested to the power requirements as shown on the plans to assure proper operation of all the components. Each control function shall be activated to check for proper indication.

D. All equipment shall be guaranteed for a period of five (5) years from date of shipment. The guarantee is effective against all defects in workmanship and/or defective component. The warranty is limited to replacement or repair of the defective equipment.

E. The panel manufacturer shall be a UL listed shop for industrial control systems and shall provide evidence of such on request from the engineer or using authority.

PART 3 – EXECUTION

3.1 PRODUCT HANDLING

A. All parts shall be properly protected so that no damage or deterioration will occur during a prolonged delay from the time of shipment until installation is completed and the units and equipment are ready for operation.

B. All equipment and parts must be properly protected against any damage during a prolonged period at the site.

C. Factory assembled parts and components shall not be dismantled for shipment unless permission is received in writing from the Engineer.

D. Finished surfaces of all exposed pump openings shall be protected by wooden blanks, strongly built and securely bolted thereto.

E. Finished iron or steel surfaces not painted shall be properly protected to prevent rust and corrosion.

F. After hydrostatic or other tests, all entrapped water shall be drained prior to shipment, and proper care shall be taken to protect parts from the entrance of water during shipment,

storage and handling.

G. Each box or package shall be properly marked to show its net weight in addition to its contents.

3.2 INSTALLATION

A. The pumps shall be installed as specified and in accordance with Manufacturer's written recommendations. The installation and initial operation of all components shall be certified. The Contractor shall provide one (1) day (minimum of 8 hours) of a factory-trained representative to certify the pump installation.

B. Installation in strict accordance with the Manufacturer's instructions and recommendations in the locations shown on the Drawings. Installation shall include furnishing the required oil and grease for initial operation. The grades of oil and grease shall be in accordance with the Manufacturer's recommendations. Anchor bolts shall be set in accordance with the Manufacturer's recommendations in the existing sludge pump support pads with vibration isolators as required by pump manufacturer. The existing reinforced concrete support pads shall be modified, as necessary, to meet the pump manufacturer's requirements by the Contractor.

C. Upon completion of the installation, the Contractor shall submit a certificate from the Manufacturer stating that the installation of the equipment is satisfactory, that the equipment is ready for operation, and that the operating personnel have been suitably instructed in the operation, lubrication and maintenance of each unit.

3.3 SHOP PAINTING

A. Before exposure to weather and prior to shop painting, all surfaces shall be thoroughly cleaned, dry and free from all mill-scale, rust, grease, dirt and other foreign matter.

B. All exposed portions of the pumps and motors shall be shop primed, with primer compatible with field painting as specified.

C. All nameplates shall be properly protected during painting.

3.4 FIELD PAINTING

A. Field painting is specified under Painting Section of this specification. The primer and paint used in the shop shall be products of the same Manufacturer as the field paint to assure compatibility.

B. All nameplates shall be properly protected during painting.

3.5 INSPECTION AND TESTING

A. General

1. The Engineer shall have the right to inspect, test or witness tests of all materials or equipment to be furnished under these specifications, prior to their shipment from the point of the manufacture.

2. The Engineer shall be notified in writing prior to initial shipment, in ample time so that arrangements can be made for inspection by the Engineer.

3. Field tests shall not be conducted until such time that the entire installation is complete and ready for testing.

B. Factory Pump Tests

1. Factory testing in accordance with the standards of the Hydraulic Institute shall be required for all pumps.

2. Certified pump performance curves shall be submitted, including head, capacity, and brake horsepower, for each pump supplied.

3. Prior to conducting a pump test, notification of such test and a list of test equipment and test procedures shall be forwarded to the Engineer at least ten working days before the schedule test date. All electronic transducers, meter, gauges, and other test instruments shall have been calibrated in accordance with the requirements of the Hydraulic Institute Standards. Copies of calibration data shall be provided.

4. All pumps shall be tested at full speed and complete staging through the specified range of flow, and head/capacity/efficiency curves plotted at maximum output speed. During each test, the pump shall be run at each head condition for sufficient time to accurately determine discharge, head, power input, and efficiency.

5. If any pump tested fails to meet any specification requirement, it will be modified until it meets all specification requirements. If any pump tested fails to meet the efficiency requirements at any of the listed flow or head conditions listed and all reasonable attempts to correct the inefficiency are unsuccessful, the pump(s) shall be replaced with units(s) which meet the specified requirements.

C. Field Inspection and Owner Instruction

1. The Contractor shall furnish the services of the Manufacturer's field service technician, who has complete knowledge of proper operation and maintenance of the equipment, for a period of not less than two (2) days to inspect the installed equipment, supervise the initial test run, and to provide instruction to the plant personnel. The first visit shall be checking and inspecting the equipment after it is installed. The second visit will be to operate and supervise the initial field test.

2. At least one (1) of the two (2) days shall be allocated solely to instruction of plant personnel in operation and maintenance of the equipment. The instruction period

shall be scheduled at least ten (10) days in advance with the Owner and shall take place prior to start up and acceptance by Owner. The final copies of operation and maintenance manuals specified must be delivered to the Engineer prior to scheduling the instruction period with the Owner with the permission of the Engineer, these services may be combined with those specified by Paragraph 1.5.

D. Field Pump Tests

1. In the presence of the Engineer, such tests as necessary to indicate that the pumps and motors conform to the operating conditions specified shall be performed. A 30-day operating period of the pumps will be required before acceptance. If a pump performance does not meet the specified requirements, corrective measures shall be taken. All test procedures shall be in accordance with factory test procedures specified above and certified results of tests shall be submitted. Provide, calibrate and install all temporary gauges and meters, make necessary tapped holes in the pipes, and install all temporary piping and wiring required for the field acceptance tests. Written test procedures shall be submitted to the Engineer for approval 30 days prior to testing.

2. All pumps operating settings, alarms, controls, and shutdown devices shall be calibrated and tested during the field tests.

3. The Contractor shall furnish all power, water, facilities, labor, materials, supplies and test instruments required to conduct field test.

4. Deliver to the Engineer, upon completion of satisfactory testing of the equipment, reports as specified in Part 1.

E. Field Electric Control System Tests

1. The electric control system shall be test operated for proper functioning prior to the pump mechanical test. The control system shall be checked out using simulated operating signals as per pump Manufacturer's recommendations.

2. The Contractor shall check all drives for correct clearances, alignment and lubrication in accordance with Manufacturer's instructions. The Contractor shall check direction of rotation of all motors and reverse connections if necessary.

3. The Contractor shall meet all the testing requirements of Division 26, Electrical, as per the NEC.

G. Field Alarm System Testing

1. Check each alarm and detection device for proper operation.

3.6 OPERATING INSTRUCTIONS

A. Operating and maintenance manuals shall be furnished. The manuals shall be prepared

specifically for this installation and shall include all required cuts, drawings, equipment lists, descriptions, etc., that are required to instruct operation and maintenance personnel unfamiliar with such equipment.

3.7 TOOLS AND SPARE PARTS

A. One (1) set of all special tools required for normal operation and maintenance shall be provided. All such tools shall be furnished in a suitable steel tool chest complete with lock and duplicate keys.

B. Provide the Owner with a complete set of spare parts per the manufacturer's recommendations.

C. Spare Parts shall be properly bound and labeled for easy identification without opening the packaging and suitably protected for long term storage.

3.8 WARRANTY

A. Pumps and control panel shall be provided with a 5-year extended warranty from the date of substantial completion.

3.9 DELIVERY, STORAGE AND HANDLING

A. The Manufacturer shall furnish and deliver all equipment, freight prepaid to job site located at Crawford Quarry Road in Falling Waters, WV.

B. All equipment shall be delivered with all required protective packaging to prevent any damage from transportation. Each container shall be clearly marked with contents contained inside.

C. The Contractor shall be responsible for all off-loading and storage of the equipment.

END OF SECTION 333218

NOTES:

1. REPLACE EXISTING PVC FLOOR DRAIN PIPE WITH NEW SCH. 40 PVC PIPE. EXACT LOCATION OF EXISTING IS NOT KNOWN. SUPPORT NEW FLOOR DRAIN LINE WITH STAINLESS STEEL SADDLE CLAMP PIPE HANGERS. CORE NEW OPENING IN EXISTING CHANNEL WALL AND GROUT EXISTING HOLE USING NON SHRINK GROUT.
2. ALL GATES AND EQUIPMENT MOUNTS ARE TO MODIFIED ONCE WALL IS EXTENDED TO ALLOW PROPER OPERATION.
3. ALL PIPING INSIDE WET WELL AND VALVE VAULT TO BE DIP UNLESS OTHERWISE NOTED.
4. A HOIST TRUCK WILL BE REQUIRED TO SERVICE THE PUMPS - NOT THIS CONTRACT

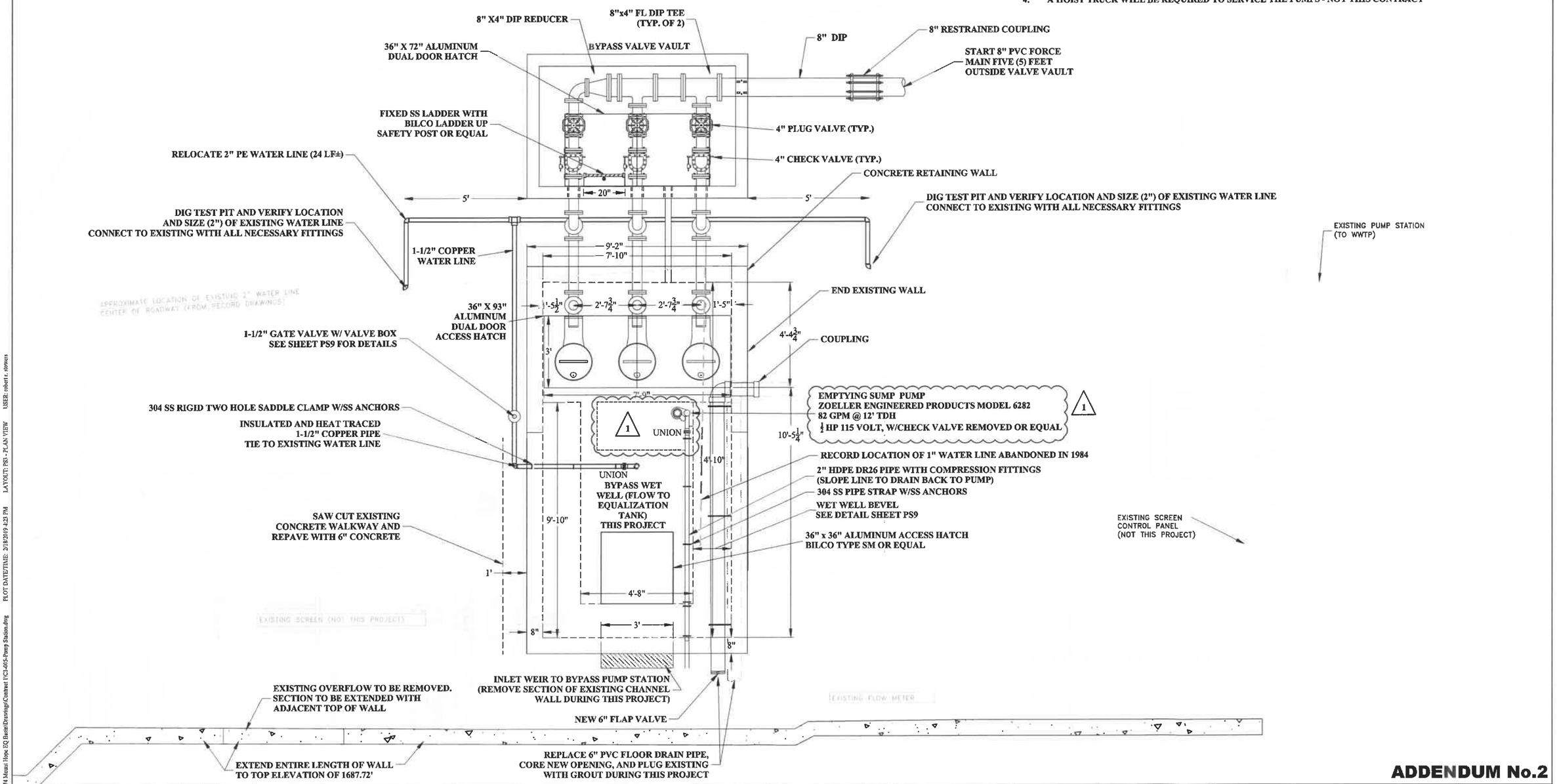

ADDENDUM No.2

THE INFORMATION CONTAINED HEREIN IS THE SOLE PROPERTY OF THE THRASHER GROUP INC. REPRODUCTION OF THESE DOCUMENTS IN WHOLE OR IN PART, FOR ANY REASON WITHOUT PRIOR WRITTEN PERMISSION, IS STRICTLY PROHIBITED. COPYRIGHT© 2019 THE THRASHER GROUP INC.

NO.	BY	DATE	DESCRIPTION
1	MPS	2/20/19	ADDENDUM #2 - NEW SUMP PUMP SELECTION

SCALE: 1/2" = 1'-0"
DRAWN: JZS DATE: 9-6-16
CHECKED: DATE:
APPROVED: DATE:
SURVEY DATE:
SURVEY BY:
FIELD BOOK No.:

THRASHER
300 ASSOCIATION DRIVE
CHARLESTON, WV 25311
www.thethrashergroup.com
PHONE (304)-343-7601
FAX (304)-343-7604

PHASE No.
CONTRACT No. 1
PROJECT No. 101-020-1474

CITY OF MOUNT HOPE
EQ BASIN PROJECT
LIFT STATION AND FORCEMAIN IMPROVEMENTS
BY-PASS PUMP STATION
PLAN

SHEET No. **PS3**

CAD FILE: R:\020-1474 Mount Hope EQ Basin\Drawings\Contract 1\C1-005-Pump Station.dwg PLOT DATE/TIME: 2/18/2019 4:23 PM LAYOUT: PS3 - PLAN VIEW USER: robert.r.stowers

NEW PUMP STATION
PUMPING ELEVATIONS
MAX W.L. ALARM 1678.50
2ND LAG. PUMP 1678.00
1ST LAG. PUMP 1677.00
LEAD PUMP 1676.00
PUMP OFF 1675.00
LOW LEVEL ALARM 1674.88

NOTES:

1. ALL PIPING INSIDE WET WELL AND VALVE VAULT DIP UNLESS OTHERWISE NOTED.
2. A HOIST TRUCK WILL BE REQUIRED TO SERVICE THE PUMPS - NOT IN THIS CONTRACT.
3. ALL BURIED PIPING SHALL BE DIP WITH MJ FITTINGS.

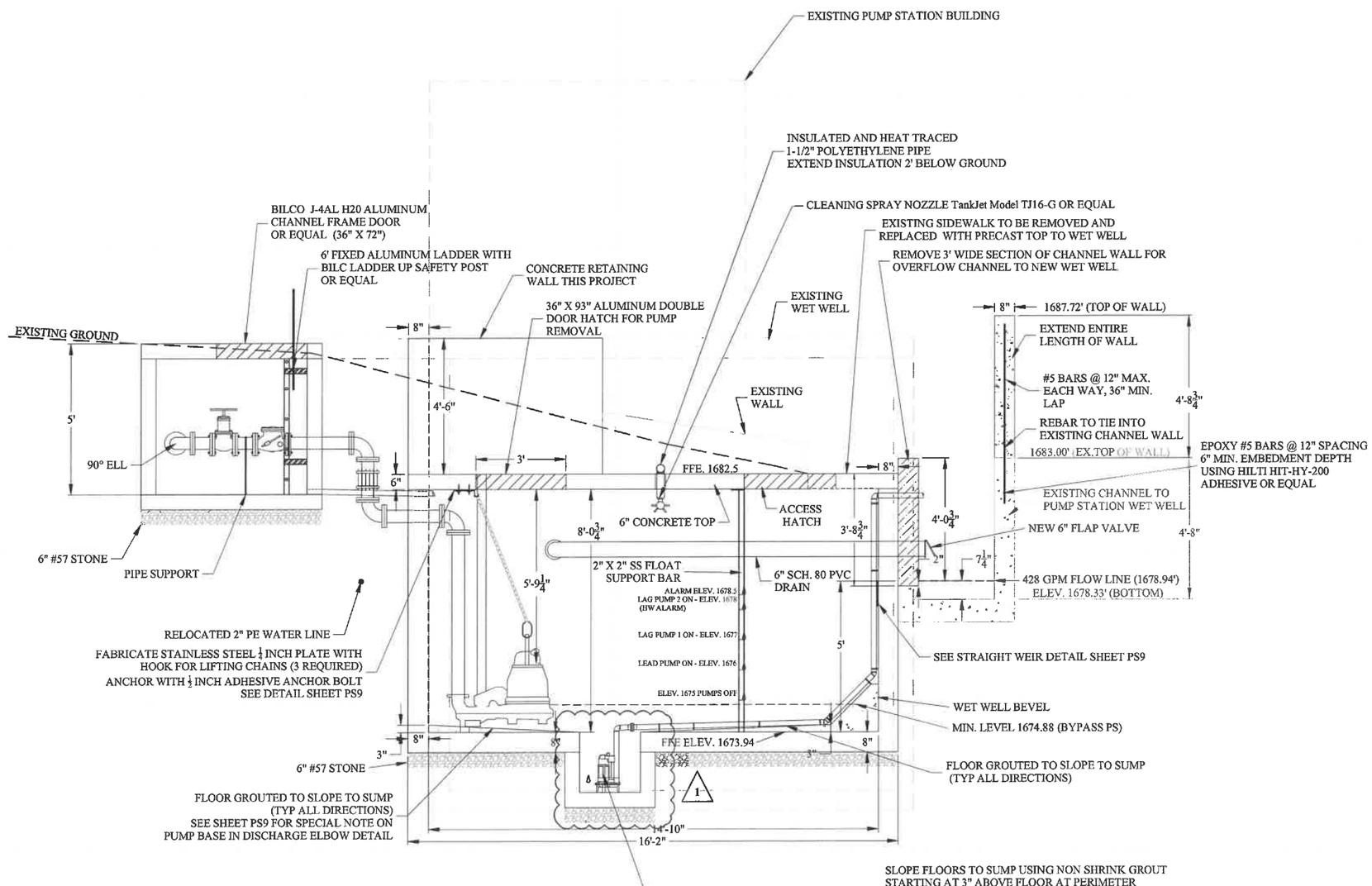

ADDENDUM No.2

THE INFORMATION CONTAINED HEREIN IS THE SOLE PROPERTY OF THE THRASHER GROUP INC. REPRODUCTION OF THESE DOCUMENTS IN WHOLE OR IN PART, FOR ANY REASON WITHOUT PRIOR WRITTEN PERMISSION, IS STRICTLY PROHIBITED. COPYRIGHT© 2019 THE THRASHER GROUP INC.

NO.	BY	DATE	DESCRIPTION
1	MPS	2/20/19	ADDENDUN #2 - NEW SUMP PUMP SELECTION

SCALE: 1/2" = 1'-0"
DRAWN: JZS DATE: 7-25-17
CHECKED: DATE:
APPROVED: DATE:
SURVEY DATE:
SURVEY BY:
FIELD BOOK No.:

THRASHER
300 ASSOCIATION DRIVE
CHARLESTON, WV 25311
www.thethrashergroup.com
PHONE (304)-343-7601
FAX (304)-343-7604

PHASE No.
CONTRACT No. 1
PROJECT No. 101-020-1474

CITY OF MOUNT HOPE
EQ BASIN PROJECT
LIFT STATION AND FORCEMAIN IMPROVEMENTS
BY-PASS PUMP STATION
SECTION

SHEET No. **PS4**

CAD FILE: R:\020-1474 Mount Hope EQ Basin\Drawings\Contract 1\C1-005-Pump Station.dwg PLOT DATE/TIME: 2/18/2019 4:25 PM LAYOUT: PS4 - SECTION VIEW USER: robert.r.stowers

NOTES:

1. ALL PIPING INSIDE WET WELL AND VALVE VAULT SHALL BE FLANGED DIP UNLESS OTHERWISE NOTED
2. ALL BURIED PIPING SHALL BE DIP WITH MJ FITTINGS.
3. A HOIST TRUCK WILL BE REQUIRED TO SERVICE THE PUMPS - NOT IN THIS CONTRACT.

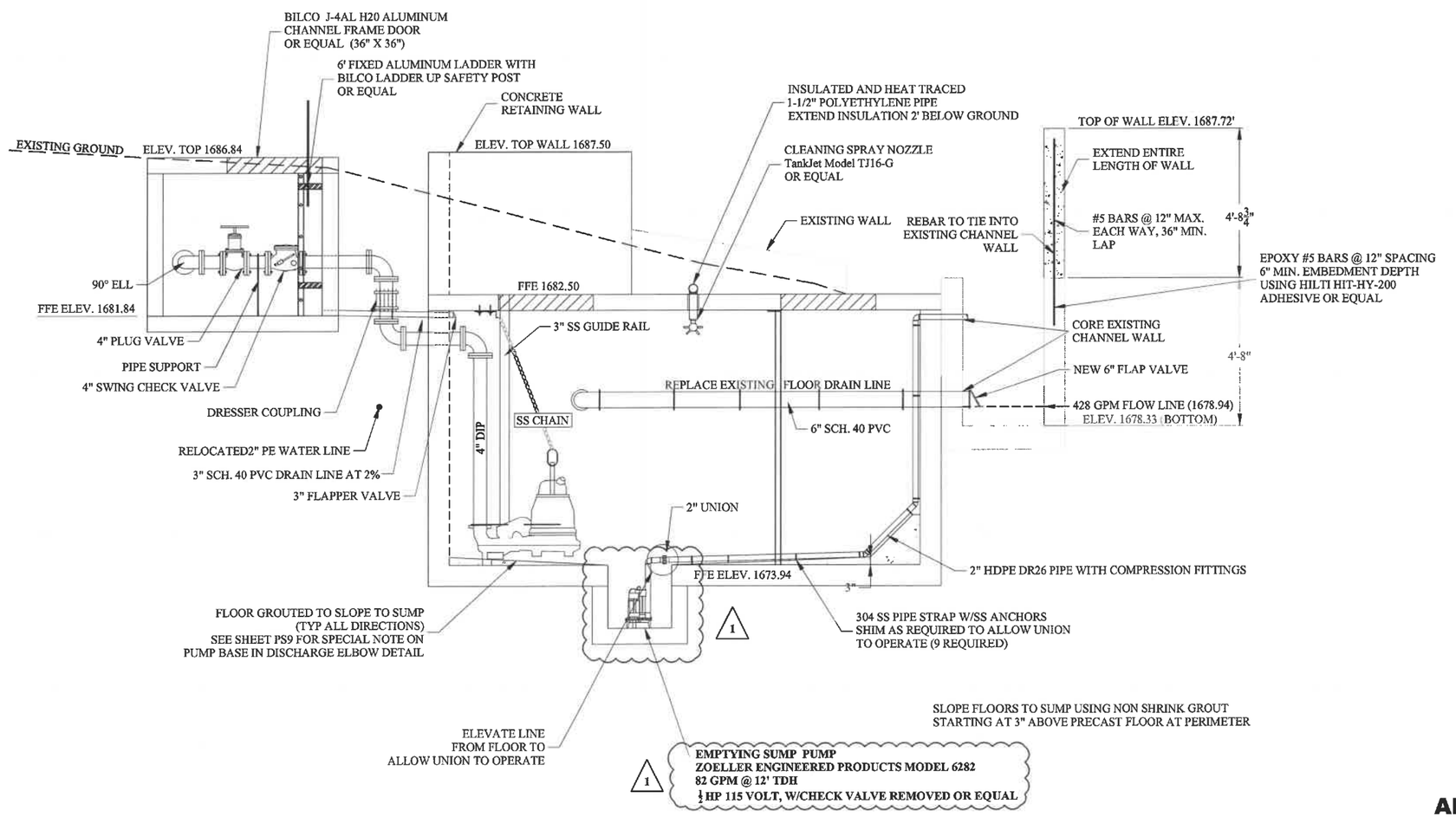

ADDENDUM No.2

THE INFORMATION CONTAINED HEREIN IS THE SOLE PROPERTY OF THE THRASHER GROUP INC. REPRODUCTION OF THESE DOCUMENTS IN WHOLE OR IN PART, FOR ANY REASON WITHOUT PRIOR WRITTEN PERMISSION, IS STRICTLY PROHIBITED. COPYRIGHT© 2019 THE THRASHER GROUP INC.

NO.	BY	DATE	DESCRIPTION
1	MPS	2/20/19	ADDENDUM #2 - NEW SUMP PUMP SELECTION

SCALE: 1/2" = 1'-0"
DRAWN: JZS DATE: 7-25-17
CHECKED: DATE:
APPROVED: DATE:
SURVEY DATE:
SURVEY BY:
FIELD BOOK No.:

THRASHER
300 ASSOCIATION DRIVE
CHARLESTON, WV 25311
www.thethrashergroup.com
PHONE (304)-343-7601
FAX (304)-343-7604

PHASE No.
CONTRACT No. 1
PROJECT No. 101-020-1474

CITY OF MOUNT HOPE
EQ BASIN PROJECT
LIFT STATION AND FORCEMAIN IMPROVEMENTS
BY-PASS PUMP STATION
SECTION

SHEET No. **PS5**

CAD FILE: R:\020-1474 Mount Hope EQ Basin\Drawings\Contract 1\C1-005-Pump Station.dwg PLOT DATE/TIME: 2/18/2019 4:30 PM LAYOUT: PS5 - PIPING SECTION VIEW USER: robert t. stowers

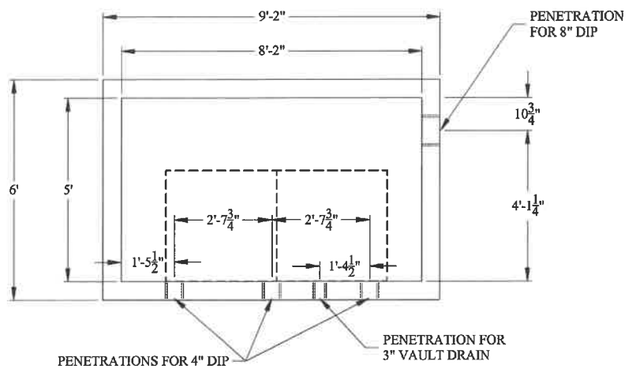

VALVE VAULT PENETRATION LOCATION

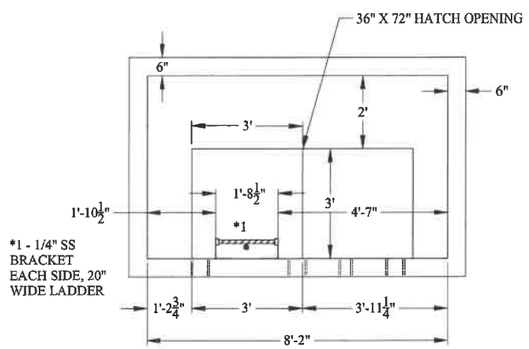

VALVE VAULT HATCH LOCATION

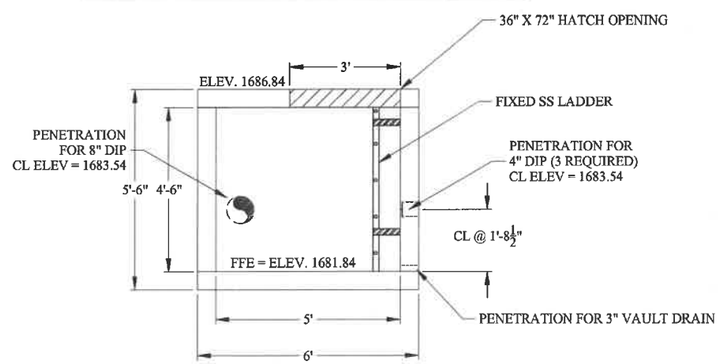

SECTION THROUGH VALVE VAULT

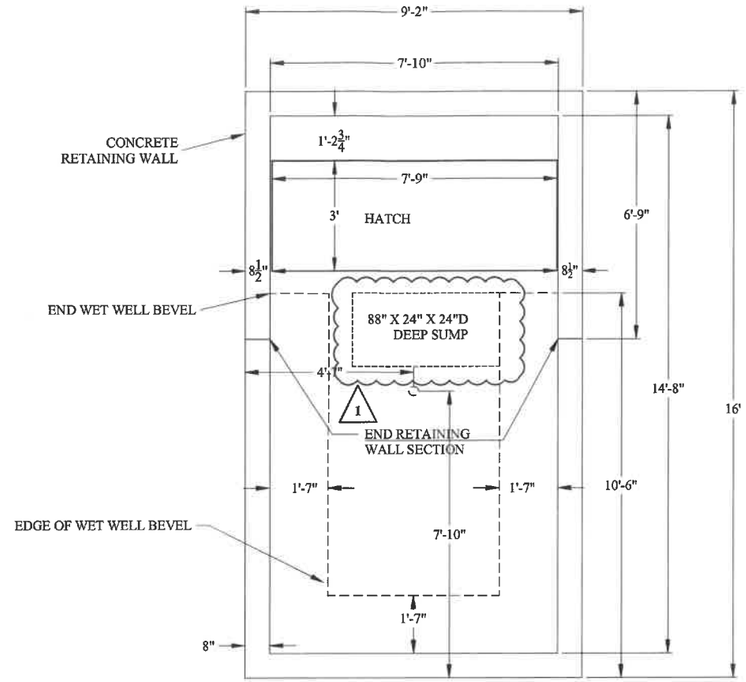

PLAN VIEW - WET WELL

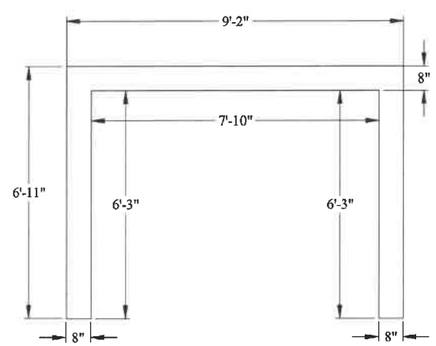

PLAN VIEW
CONCRETE RETAINING WALL

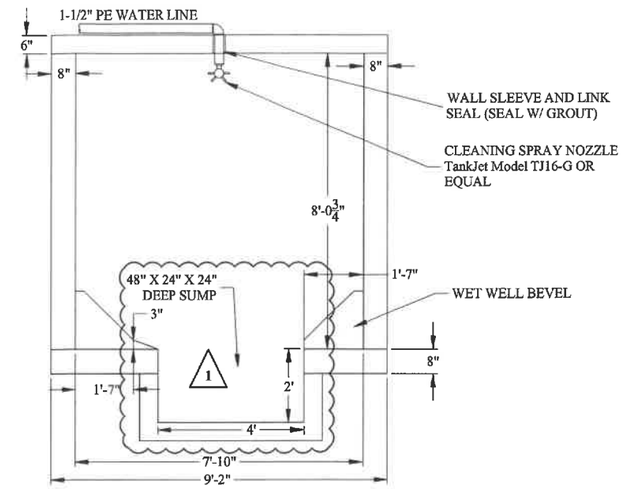

END SECTION - WET WELL

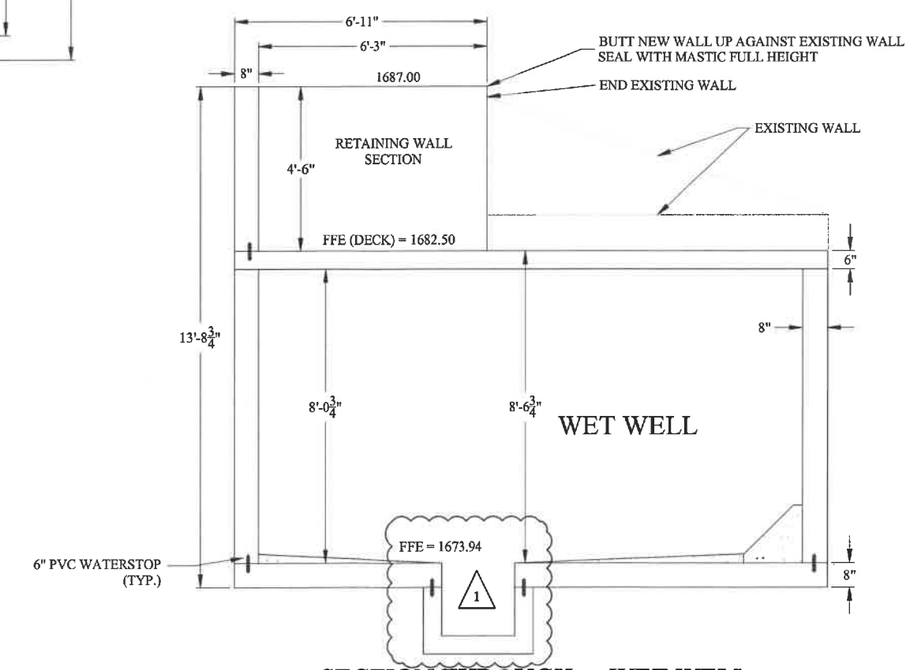

SECTION THROUGH - WET WELL

ADDENDUM No.2

THE INFORMATION CONTAINED HEREIN IS THE SOLE PROPERTY OF THE THRASHER GROUP INC. REPRODUCTION OF THESE DOCUMENTS IN WHOLE OR IN PART, FOR ANY REASON WITHOUT PRIOR WRITTEN PERMISSION, IS STRICTLY PROHIBITED. COPYRIGHT © 2019 THE THRASHER GROUP INC.

NO.	BY	DATE	DESCRIPTION
1	MPS	2/20/19	ADDENDUM #1 - SUMP SIZE

SCALE: 1/2" = 1'-0"
DRAWN: JZS DATE: 7-27-17
CHECKED: DATE:
APPROVED: DATE:
SURVEY DATE:
SURVEY BY:
FIELD BOOK No.:

THRASHER
300 ASSOCIATION DRIVE
CHARLESTON, WV 25311
www.thethrashergroup.com
PHONE (304)-343-7601
FAX (304)-343-7604

PHASE No.
CONTRACT No. 1
PROJECT No. 101-020-1474

CITY OF MOUNT HOPE
EQ BASIN PROJECT
LIFT STATION AND FORCEMAIN IMPROVEMENTS
CONCRETE WET WELL AND VALVE VAULT DETAILS

SHEET No. **PS6**

C:\AD FILE: R:\020-1474 Mount Hope EQ Basin\Drawings\Contract 1\C1-A05-Pump Station.dwg PLOT DATE/TIME: 2/18/2019 4:33 PM LAYOUT: PS6 - CONCRETE DETAILS USER: robert.e.stowers

CITY OF MOUNT HOPE

609 MAIN STREET
MOUNT HOPE, WV 25880

EQ BASIN PROJECT

CONTRACT #1 – LIFT STATION AND FORCE MAIN IMPROVEMENTS
CONTRACT #2 – EQUALIZATION TANK

THE THRASHER GROUP, INC.
CHARLESTON, WV 25311
Telephone # (304) 343-7601
Fax # (304) 343-7604

PRE-BID CONFERENCE AGENDA

PROJECT LOCATION:	Mount Hope, Fayette County, West Virginia
ENGINEER'S PROJECT #:	020-1474
DATE OF CONFERENCE:	February 20, 2019 at 10:00 AM
CONFERENCE LOCATION:	Mount Hope Housing Authority Community Room 9B Midtown Terrace Mount Hope, WV 25880

PRE-BID AGENDA

I. Introductions

a. **City of Mount Hope: Michael Kessinger (mayor), Steve Brown (council member), Charles Kidd, (council member), Tyrone Powell (council member), Richard Smith (council member), Patricia Conelly (council member)**
   i. **Virgil Kincaid**
   ii. **Brandon Sheets**

b. **Engineer: Michael Stone**

II. General Project Description

a. Contract #1 – Lift Station and Forcemain Improvements: **This contract consists of approximately 3,600 LF 8" PVC Forcemain; 1,780 LF 8" PVC Forcemain, installed in same trench; 650 LF 6" PVC Gravity Sewer; 210 LF 6" DIP Gravity Sewer; 1,100 LF 2" PVC Non-Potable Water Line; and installation of new Lift Station adjacent to existing lift station.**

b. Contract #2 – Equalization Tank: **This contract consists of constructing a 2 MG Equalization Tank, including associated site work, access road, site piping with valves, flow meter and vault, fencing, and all necessary appurtenances.**

III. General Bidding Information

a. General

   i. **All Contracts**
      1. **Bid opening will be on March 12, 2019**
      2. **Location:** 609 Main Street, Mount Hope, West Virginia 25880
      3. **Time**
         a. **Contract #1 – 2:00 PM**
         b. **Contract #2 – 3:00 PM**

   ii. **Two Envelope System – All BOR (blue) in 1st envelope, and BID Form (Yellow) in 2nd envelope.**
      1. **Envelope 1**
         a. **Name & address of Bidder**
         b. **Project Owner name – City of Mount Hope**
         c. **Bid for Contract #**

2. **Envelope 2**
    a. **Placed in Envelope 1**
    b. **Labeled "Bid Proposal"**

iii. **Contract Times**
    a. **Contract #1**
        i. **Substantial Completion - 270 days**
        ii. **Final Completion - 300 days**
        iii. **Liquidated Damages - $1,000/day**
    b. **Contract #2**
        i. **Substantial Completion - 240 days**
        ii. **Final Completion - 270**
        iii. **Liquidated Damages - $1,000/day**

b. Bid Opening Requirements - **Blue Pages – Labeled BOR**

i. **Submitted on Time**
ii. **Bid Bond – 5% total Bid (ORIGINAL)**
iii. **Certification of Non-Segregated Facilities**
iv. **EEO Certification**
v. **Certification of receipt of all Addenda**
vi. **Drug Free Work Place**
vii. **American Iron and Steel (AIS) Requirements**
    1. **Additional information in the front end documents**
viii. **Copy of Current Contractor's License**

c. Bid Form - **Yellow Pages – Section 410**

i. **Contract #1**
    1. **7 Unit Price Base Bid Items**
    2. **4 Lump Sum Base Bid Items**

ii. **Contract #2**
    1. **5 Lump Sum Base Bid Items**

d. Method of Award – **Lowest Responsive Responsible Bidder; Base Bid for all Contracts**

IV. Details of Project

a. Construction Sequence of Events – **As Described in the Summary Section 011000 for each Contract.**

b. Material and Equipment - **As Described in the Plans/Specs. "Or Equal" items will be reviewed during the submittal process as described in Section 012500 "Substitution Procedures" and 013300 "Submittal Requirements".**

c. Other Miscellaneous Items

i. Project Estimates:

1. Contract #1 – $895,000

2. Contract #2 - $1,300,000

V. Permits - **The City has obtained the following permits:**

a. **WVDEP – Construction Stormwater Permit,**

b. **WVDEP – NPDES permit modification,**

c. **WVDOH – Utilities Permit**

d. **WVDOH – Encroachment Permit for Access Road in Contract #2**

VI. B&O Taxes / City Contractor's License

a. B&O 1% on $100

b. City Contractor's License $40

VII. Geotechnical Report

a. Available for pickup at Pre-Bid Meeting

b. Waiver for Report Required

VIII. Office Trailer and Equipment Storage

a. **Locations for the Office Trailer, Equipment and Storage Area for each Contract must be coordinated with the Engineer and Owner. The area shall be included in the Pre-Construction Videos – must be set up prior to 1st pay. Will include bathroom, phone, internet, fax, etc.**

IX. Addressing Questions

a. **All in Writing – Reference City of Mount Hope – Contract #, Please Reference Sheet # and Spec Section for all questions.**

b. **Fax: 304-343-7604 Attn: Michael Stone**

c. **Email: mstone@thethrashergroup.com**

X. Addendum

a. **Addendum No. 1 was provided to all planholders on Monday, February 4th**

b. **Addendum No. 2 will be provided to all planholders on Tuesday March 5th.**

c. **Last Day for Questions will be COB Friday, March 1, 2019**

XI. Funding Agencies – **This project is funded by the CWSRF (DEP) and IJDC. Davis Bacon Wage Rates DO Apply to all contracts. Wage Rates will be included in Addendum No. 2.**

XII. Owner – City of Mount Hope

XIII. WVDEP

XIV. Question and Answer Session

CITY OF MOUNT HOPE
FAYETTE COUNTY, WESTVIRGINIA

CONTRACT #1 - LIFT STATION AND FORCE MAIN IMPROVEMENTS
CONTRACT #2 - EQUALIZATION TANK

PRE-BID CONFERENCE
10:00 AM
February 20, 2019

NAME	REPRESENTING	E-MAIL ADDRESS/PHONE/FAX	CONTRACTS BIDDING
Mike Schmidt	Dutchland Inc.	mschmidt@dutchlandinc.com	2
DERRECK SEARS	Fastersupply	dsears@fastersupply.com	
Andrew Fowler	Walker Machinery	afowler@walker-cat.com	
Dominique Madison	DEP	dominique.l.madison@wv.gov	

General Decision Number: WV190006 02/22/2019 WV6

Superseded General Decision Number: WV20180006

State: West Virginia

Construction Type: Building

County: Fayette County in West Virginia.

Note: Under Executive Order (EO) 13658, an hourly minimum wage of $10.60 for calendar year 2019 applies to all contracts subject to the Davis-Bacon Act for which the contract is awarded (and any solicitation was issued) on or after January 1, 2015. If this contract is covered by the EO, the contractor must pay all workers in any classification listed on this wage determination at least $10.60 per hour (or the applicable wage rate listed on this wage determination, if it is higher) for all hours spent performing on the contract in calendar year 2019. If this contract is covered by the EO and a classification considered necessary for performance of work on the contract does not appear on this wage determination, the contractor must pay workers in that classification at least the wage rate determined through the conformance process set forth in 29 CFR 5.5(a)(1)(ii) (or the EO minimum wage rate,if it is higher than the conformed wage rate). The EO minimum wage rate will be adjusted annually. Please note that this EO applies to the above-mentioned types of contracts entered into by the federal government that are subject to the Davis-Bacon Act itself, but it does not apply to contracts subject only to the Davis-Bacon Related Acts, including those set forth at 29 CFR 5.1(a)(2)-(60). Additional information on contractor requirements and worker protections under the EO is available at www.dol.gov/whd/govcontracts.

Modification Number	Publication Date
0	01/04/2019
1	01/25/2019
2	02/01/2019
3	02/22/2019

ASBE0080-002 03/07/2016

	Rates	Fringes
ASBESTOS WORKER/HEAT & FROST INSULATOR	$ 31.98	18.83

BOIL0667-005 03/01/2018

	Rates	Fringes
BOILERMAKER	$ 39.38	23.77

BRWV0009-006 12/01/2018

	Rates	Fringes

BRICKLAYER

Bricklayer & Brick Pointer/Caulker/Cleaner.....	$ 29.77	23.98

BRWV0015-010 06/01/2018

	Rates	Fringes
MASON - STONE.....	$ 29.59	21.88

CARP1024-001 12/01/2017

	Rates	Fringes
CARPENTER (Scaffold Builder Only).....	$ 28.05	17.10

CARP1755-003 12/01/2016

	Rates	Fringes
MILLWRIGHT.....	$ 33.95	21.75

CARP1911-003 12/01/2017

	Rates	Fringes
CARPENTER (Including Drywall Hanging, Form Work and Floor Laying - Carpet, Hardwood, Resilient and Vinyl; excluding Scaffold Builder).....	$ 29.63	20.75

ELEC0466-008 06/01/2018

	Rates	Fringes
ELECTRICIAN.....	$ 37.16	18.62

ENGI0132-008 12/01/2018

	Rates	Fringes
POWER EQUIPMENT OPERATOR:		
GROUP 1.....	$ 39.56	19.20
GROUP 2.....	$ 39.21	19.20
GROUP 3.....	$ 38.21	19.20
GROUP 4.....	$ 27.71	19.20

GROUP 1: All Friction Cranes, Tower Cranes and all Cranes with 180 ft. or more of boom including mast and jibs or lifting capacity of 100 tons or more and hoists with 30,000 pound line pull or more

GROUP 2: Operating Cranes and Tower Cranes with a lifting capacity of 15 tons and ove

GROUP 3: Backhoe, Excavator, all other Cranes

GROUP 4: Bobcat/Skid Steer/Skid Loader, Roller, Oiler

IRON0549-006 12/01/2017

	Rates	Fringes
IRONWORKER (Ornamental).....	$ 39.34	19.64

---

* IRON0787-006 12/01/2018

	Rates	Fringes
IRONWORKER (Reinforcing).....	$ 33.14	21.55

LABO0379-019 12/01/2017

	Rates	Fringes
LABORER		
Wacker Roller Operator.....	$ 26.17	16.50

LABO0453-003 12/01/2017

	Rates	Fringes
LABORER		
Concrete Saw (Hand Held/Walk Behind).....	$ 22.76	16.75
Grouting.....	$ 22.11	17.25

LABO0543-003 06/01/2017

	Rates	Fringes
LABORER.....	$ 25.41	16.75

LABORER CLASSIFICATIONS

Asphalt Raker, Jack Hammer, Motorized Buggy Operator, Water Boy

---

LABO0984-005 12/01/2017

	Rates	Fringes
LABORER		
Group 2.....	$ 21.94	15.75

LABORER CLASSIFICATIONS

GROUP 2: Airtool Operator, Asbestos Abatement (Removal from Floors, Walls, and Ceiling), Bobcat Operator (Clean up/Demolition), Dewatering, Rodman, Skytrak Forklift Operator

---

LABO1353-004 12/01/2017

	Rates	Fringes

LABORER
Carpenter Tender.....$ 24.78 17.25
Common or General.....$ 24.16 17.25

PAIN0970-007 12/01/2018

	Rates	Fringes
PAINTER (Drywall Finishing/Taping)	$ 27.82	18.50

---

* PAIN1195-002 12/01/2018

	Rates	Fringes
GLAZIER	$ 30.75	12.24

PLAS0926-009 06/01/2018

	Rates	Fringes
CEMENT MASON/CONCRETE FINISHER	$ 31.63	21.26
PLASTERER	$ 30.06	18.43

---

* UAVG-WV-0003 01/01/2019

	Rates	Fringes
LABORER (Chipping Guns)	$ 24.78	16.25
LABORER (Concrete Worker)	$ 23.57	16.17
LABORER (Grade Checker)	$ 22.70	16.11
LABORER (Landscape)	$ 22.99	16.35
LABORER (Mortar Mixing)	$ 23.35	16.06
LABORER (Pipelayer)	$ 24.06	16.31
LABORER (Scaffold Builder)	$ 23.63	16.12
LABORER (Tamper- Hand Held)	$ 23.33	16.04

---

* UAVG-WV-0028 01/01/2019

	Rates	Fringes
PLUMBER	$ 32.54	24.58

SUWV2012-004 08/13/2012

	Rates	Fringes
CEMENT MASON/CONCRETE FINISHER	$ 32.83	3.00
IRONWORKER, STRUCTURAL	$ 36.17	3.00
LABORER: Demolition	$ 20.58	9.47
LABORER: Mason Tender - Brick	$ 27.55	3.00
LABORER: Mason Tender - Cement/Concrete	$ 22.05	8.54
OPERATOR: Bulldozer	$ 30.24	10.26

OPERATOR: Forklift	$ 33.09	3.00
PAINTER: Brush, Roller and Spray	$ 28.55	3.00
PIPEFITTER, Includes HVAC Pipe Installation	$ 27.64	18.09
ROOFER	$ 24.28	9.32
SHEET METAL WORKER, Includes HVAC Duct Installation	$ 25.61	15.68
Truck Driver: Single and Double Axle Dump Trucks	$ 28.52	3.00

WELDERS - Receive rate prescribed for craft performing operation to which welding is incidental.

==========

Note: Executive Order (EO) 13706, Establishing Paid Sick Leave for Federal Contractors applies to all contracts subject to the Davis-Bacon Act for which the contract is awarded (and any solicitation was issued) on or after January 1, 2017. If this contract is covered by the EO, the contractor must provide employees with 1 hour of paid sick leave for every 30 hours they work, up to 56 hours of paid sick leave each year. Employees must be permitted to use paid sick leave for their own illness, injury or other health-related needs, including preventive care; to assist a family member (or person who is like family to the employee) who is ill, injured, or has other health-related needs, including preventive care; or for reasons resulting from, or to assist a family member (or person who is like family to the employee) who is a victim of, domestic violence, sexual assault, or stalking. Additional information on contractor requirements and worker protections under the EO is available at www.dol.gov/whd/govcontracts.

Unlisted classifications needed for work not included within the scope of the classifications listed may be added after award only as provided in the labor standards contract clauses (29CFR 5.5 (a) (1) (ii)).

The body of each wage determination lists the classification and wage rates that have been found to be prevailing for the cited type(s) of construction in the area covered by the wage determination. The classifications are listed in alphabetical order of "identifiers" that indicate whether the particular rate is a union rate (current union negotiated rate for local), a survey rate (weighted average rate) or a union average rate (weighted union average rate).

Union Rate Identifiers

A four letter classification abbreviation identifier enclosed in dotted lines beginning with characters other than "SU" or "UAVG" denotes that the union classification and rate were prevailing for that classification in the survey. Example: PLUM0198-005 07/01/2014. PLUM is an abbreviation identifier of the union which prevailed in the survey for this classification, which in this example would be Plumbers. 0198 indicates the local union number or district council number where applicable, i.e., Plumbers Local 0198. The next number, 005 in the example, is an internal number used in processing the wage determination. 07/01/2014 is the effective date of the most current negotiated rate, which in this example is July 1, 2014.

Union prevailing wage rates are updated to reflect all rate changes in the collective bargaining agreement (CBA) governing this classification and rate.

Survey Rate Identifiers

Classifications listed under the "SU" identifier indicate that no one rate prevailed for this classification in the survey and the published rate is derived by computing a weighted average rate based on all the rates reported in the survey for that classification. As this weighted average rate includes all rates reported in the survey, it may include both union and non-union rates. Example: SULA2012-007 5/13/2014. SU indicates the rates are survey rates based on a weighted average calculation of rates and are not majority rates. LA indicates the State of Louisiana. 2012 is the year of survey on which these classifications and rates are based. The next number, 007 in the example, is an internal number used in producing the wage determination. 5/13/2014 indicates the survey completion date for the classifications and rates under that identifier.

Survey wage rates are not updated and remain in effect until a new survey is conducted.

Union Average Rate Identifiers

Classification(s) listed under the UAVG identifier indicate that no single majority rate prevailed for those classifications; however, 100% of the data reported for the classifications was union data. EXAMPLE: UAVG-OH-0010 08/29/2014. UAVG indicates that the rate is a weighted union average rate. OH indicates the state. The next number, 0010 in the example, is an internal number used in producing the wage determination. 08/29/2014 indicates the survey completion date for the classifications and rates under that identifier.

A UAVG rate will be updated once a year, usually in January of each year, to reflect a weighted average of the current negotiated/CBA rate of the union locals from which the rate is based.

WAGE DETERMINATION APPEALS PROCESS

1.) Has there been an initial decision in the matter? This can be:

* an existing published wage determination
* a survey underlying a wage determination
* a Wage and Hour Division letter setting forth a position on a wage determination matter
* a conformance (additional classification and rate) ruling

On survey related matters, initial contact, including requests for summaries of surveys, should be with the Wage and Hour Regional Office for the area in which the survey was conducted because those Regional Offices have responsibility for the Davis-Bacon survey program. If the response from this initial contact is not satisfactory, then the process described in 2.) and 3.) should be followed.

With regard to any other matter not yet ripe for the formal process described here, initial contact should be with the Branch of Construction Wage Determinations. Write to:

Branch of Construction Wage Determinations
Wage and Hour Division
U.S. Department of Labor
200 Constitution Avenue, N.W.
Washington, DC 20210

2.) If the answer to the question in 1.) is yes, then an interested party (those affected by the action) can request review and reconsideration from the Wage and Hour Administrator (See 29 CFR Part 1.8 and 29 CFR Part 7). Write to:

Wage and Hour Administrator
U.S. Department of Labor
200 Constitution Avenue, N.W.
Washington, DC 20210

The request should be accompanied by a full statement of the interested party's position and by any information (wage payment data, project description, area practice material, etc.) that the requestor considers relevant to the issue.

3.) If the decision of the Administrator is not favorable, an interested party may appeal directly to the Administrative Review Board (formerly the Wage Appeals Board). Write to:

Administrative Review Board
U.S. Department of Labor
200 Constitution Avenue, N.W.
Washington, DC 20210

4.) All decisions by the Administrative Review Board are final.

==========

END OF GENERAL DECISION

General Decision Number: WV190061 02/22/2019 WV61

Superseded General Decision Number: WV20180061

State: West Virginia

Construction Type: Heavy

Counties: Barbour, Braxton, Calhoun, Fayette, Gilmer, Greenbrier, Jackson, Lewis, Mason, McDowell, Mingo, Monroe, Nicholas, Pendleton, Pocahontas, Randolph, Ritchie, Roane, Summers, Tucker, Upshur, Webster and Wyoming Counties in West Virginia.

Note: Under Executive Order (EO) 13658, an hourly minimum wage of $10.60 for calendar year 2019 applies to all contracts subject to the Davis-Bacon Act for which the contract is awarded (and any solicitation was issued) on or after January 1, 2015. If this contract is covered by the EO, the contractor must pay all workers in any classification listed on this wage determination at least $10.60 per hour (or the applicable wage rate listed on this wage determination, if it is higher) for all hours spent performing on the contract in calendar year 2019. If this contract is covered by the EO and a classification considered necessary for performance of work on the contract does not appear on this wage determination, the contractor must pay workers in that classification at least the wage rate determined through the conformance process set forth in 29 CFR 5.5(a)(1)(ii) (or the EO minimum wage rate,if it is higher than the conformed wage rate). The EO minimum wage rate will be adjusted annually. Please note that this EO applies to the above-mentioned types of contracts entered into by the federal government that are subject to the Davis-Bacon Act itself, but it does not apply to contracts subject only to the Davis-Bacon Related Acts, including those set forth at 29 CFR 5.1(a)(2)-(60). Additional information on contractor requirements and worker protections under the EO is available at www.dol.gov/whd/govcontracts.

Modification Number	Publication Date
0	01/04/2019
1	01/25/2019
2	02/01/2019
3	02/22/2019

CARP1024-011 12/01/2015

	Rates	Fringes
MILLWRIGHT	$ 31.26	15.80

ELEC0307-008 05/28/2017

	Rates	Fringes
ELECTRICIAN	$ 32.00	17.22

ENGI0132-014 12/01/2018

	Rates	Fringes
POWER EQUIPMENT OPERATOR:		
GROUP 1	$ 35.95	18.60
GROUP 2	$ 33.19	18.60
GROUP 3	$ 32.08	18.60
GROUP 4	$ 28.62	18.60

POWER EQUIPMENT OPERATOR CLASSIFICATIONS

GROUP 1: Cranes (All types), Boom trucks, Loaders of six (6) cubic yard capacity and over, Excavators and shovels with an operating weight of one hundred ten thousand (110,000) pounds and over.

GROUP 2: Loaders up to six (6) cubic yard capacity, Backhoe, Bulldozers, Bobcat/Skid Steer/Skid Loader, Forklift, Drill, Excavators and shovels with an operating weight of up to one hundred ten thousand (110,000) pounds

GROUP 3: Roller.

GROUP 4: Oiler

ENGI0132-027 12/01/2018

	Rates	Fringes
POWER EQUIPMENT OPERATOR: (PIPELINE)		
GROUP 1	$ 35.95	18.60
GROUP 2	$ 33.19	18.60

POWER EQUIPMENT OPERATOR PIPELINE CLASSIFICATIONS

GROUP 1: Boom, Bulldozer, Excavator, Mechanic, Pipe Bending Machine

GROUP 2: Oiler.

ENGI0132-029 12/01/2018

	Rates	Fringes
POWER EQUIPMENT OPERATOR: Single and Double Axle Dump Trucks	$ 33.19	18.60

IRON0549-011 12/01/2015

	Rates	Fringes
IRONWORKER, ORNAMENTAL	$ 35.40	23.24

IRON0568-020 12/01/2017

	Rates	Fringes
IRONWORKER, REINFORCING AND STRUCTURAL	$ 33.29	16.93

LABO0379-040 12/01/2017

	Rates	Fringes
LABORER: (PIPELINE)	$ 25.11	16.50

LABORER CLASSIFICATIONS:

Chain Saw, Common, Flagger, Landscape, Pipelayer, Sandblaster

---

LABO0379-043 12/01/2017

	Rates	Fringes
LABORER:		
GROUP 1	$ 27.20	16.50
GROUP 2	$ 26.17	16.50
GROUP 3	$ 25.11	16.50

GROUP 1: Tunnel Driller, Tunnel Miner.

GROUP 2: Air Tool Operator, Chain Saw, Compactor (Dirt) Hand Held, Concrete Worker, Hand Held Drill, Form Work Only, Grade Checker, Grouting, Pipelayer, Skytrak Forklift Operator, Tamper (Hand Held), Wacker Roller Operator.

GROUP 3: Carpenter Tender, Common or General, Flagger, Landscape

---

PLAS0926-001 06/01/2018

	Rates	Fringes
CEMENT MASON/CONCRETE FINISHER	$ 31.63	21.26

---

* UAVG-WV-0010 01/01/2019

	Rates	Fringes
LABORER (Mason Tender - Cement/Concrete)	$ 26.17	16.50

---

* UAVG-WV-0012 01/01/2019

	Rates	Fringes
POWER EQUIPMENT OPERATOR (Mechanic)	$ 35.45	18.30

WELDERS - Receive rate prescribed for craft performing operation to which welding is incidental.

==========

Note: Executive Order (EO) 13706, Establishing Paid Sick Leave for Federal Contractors applies to all contracts subject to the Davis-Bacon Act for which the contract is awarded (and any solicitation was issued) on or after January 1, 2017. If this contract is covered by the EO, the contractor must provide employees with 1 hour of paid sick leave for every 30 hours they work, up to 56 hours of paid sick leave each year. Employees must be permitted to use paid sick leave for their own illness, injury or other health-related needs, including preventive care; to assist a family member (or person who is like family to the employee) who is ill, injured, or has other health-related needs, including preventive care; or for reasons resulting from, or to assist a family member (or person who is like family to the employee) who is a victim of, domestic violence, sexual assault, or stalking. Additional information on contractor requirements and worker protections under the EO is available at www.dol.gov/whd/govcontracts.

Unlisted classifications needed for work not included within the scope of the classifications listed may be added after award only as provided in the labor standards contract clauses (29CFR 5.5 (a) (1) (ii)).

The body of each wage determination lists the classification and wage rates that have been found to be prevailing for the cited type(s) of construction in the area covered by the wage determination. The classifications are listed in alphabetical order of "identifiers" that indicate whether the particular rate is a union rate (current union negotiated rate for local), a survey rate (weighted average rate) or a union average rate (weighted union average rate).

Union Rate Identifiers

A four letter classification abbreviation identifier enclosed in dotted lines beginning with characters other than "SU" or "UAVG" denotes that the union classification and rate were prevailing for that classification in the survey. Example: PLUM0198-005 07/01/2014. PLUM is an abbreviation identifier of the union which prevailed in the survey for this classification, which in this example would be Plumbers. 0198 indicates the local union number or district council number where applicable, i.e., Plumbers Local 0198. The next number, 005 in the example, is an internal number used in processing the wage determination. 07/01/2014 is the effective date of the most current negotiated rate, which in this example is July 1, 2014.

Union prevailing wage rates are updated to reflect all rate changes in the collective bargaining agreement (CBA) governing this classification and rate.

Survey Rate Identifiers

Classifications listed under the "SU" identifier indicate that no one rate prevailed for this classification in the survey and the published rate is derived by computing a weighted average rate based on all the rates reported in the survey for that classification. As this weighted average rate includes all rates reported in the survey, it may include both union and non-union rates. Example: SULA2012-007 5/13/2014. SU indicates the rates are survey rates based on a weighted average calculation of rates and are not majority rates. LA indicates the State of Louisiana. 2012 is the year of survey on which these classifications and rates are based. The next number, 007 in the example, is an internal number used in producing the wage determination. 5/13/2014 indicates the survey completion date for the classifications and rates under that identifier.

Survey wage rates are not updated and remain in effect until a new survey is conducted.

Union Average Rate Identifiers

Classification(s) listed under the UAVG identifier indicate that no single majority rate prevailed for those classifications; however, 100% of the data reported for the classifications was union data. EXAMPLE: UAVG-OH-0010 08/29/2014. UAVG indicates that the rate is a weighted union average rate. OH indicates the state. The next number, 0010 in the example, is an internal number used in producing the wage determination. 08/29/2014 indicates the survey completion date for the classifications and rates under that identifier.

A UAVG rate will be updated once a year, usually in January of each year, to reflect a weighted average of the current negotiated/CBA rate of the union locals from which the rate is based.

WAGE DETERMINATION APPEALS PROCESS

1.) Has there been an initial decision in the matter? This can be:

* an existing published wage determination
* a survey underlying a wage determination
* a Wage and Hour Division letter setting forth a position on a wage determination matter
* a conformance (additional classification and rate) ruling

On survey related matters, initial contact, including requests for summaries of surveys, should be with the Wage and Hour Regional Office for the area in which the survey was conducted because those Regional Offices have responsibility for the Davis-Bacon survey program. If the response from this initial contact is not satisfactory, then the process described in 2.) and 3.) should be followed.

With regard to any other matter not yet ripe for the formal process described here, initial contact should be with the

Branch of Construction Wage Determinations. Write to:

Branch of Construction Wage Determinations
Wage and Hour Division
U.S. Department of Labor
200 Constitution Avenue, N.W.
Washington, DC 20210

2.) If the answer to the question in 1.) is yes, then an interested party (those affected by the action) can request review and reconsideration from the Wage and Hour Administrator (See 29 CFR Part 1.8 and 29 CFR Part 7). Write to:

Wage and Hour Administrator
U.S. Department of Labor
200 Constitution Avenue, N.W.
Washington, DC 20210

The request should be accompanied by a full statement of the interested party's position and by any information (wage payment data, project description, area practice material, etc.) that the requestor considers relevant to the issue.

3.) If the decision of the Administrator is not favorable, an interested party may appeal directly to the Administrative Review Board (formerly the Wage Appeals Board). Write to:

Administrative Review Board
U.S. Department of Labor
200 Constitution Avenue, N.W.
Washington, DC 20210

4.) All decisions by the Administrative Review Board are final.

==========

END OF GENERAL DECISION

General Decision Number: WV190080 01/04/2019 WV80

Superseded General Decision Number: WV20180080

State: West Virginia

Construction Type: Highway

Counties: West Virginia Statewide.

HIGHWAY CONSTRUCTION PROJECTS (excluding tunnels, building structures in rest area projects & railroad construction; bascule, suspension & spandrel arch bridges designed for commercial navigation, bridges involving marine construction; and other major bridges).HIGHWAY CONSTRUCTION PROJECTS

Note: Under Executive Order (EO) 13658, an hourly minimum wage of $10.60 for calendar year 2019 applies to all contracts subject to the Davis-Bacon Act for which the contract is awarded (and any solicitation was issued) on or after January 1, 2015. If this contract is covered by the EO, the contractor must pay all workers in any classification listed on this wage determination at least $10.60 per hour (or the applicable wage rate listed on this wage determination, if it is higher) for all hours spent performing on the contract in calendar year 2019. If this contract is covered by the EO and a classification considered necessary for performance of work on the contract does not appear on this wage determination, the contractor must pay workers in that classification at least the wage rate determined through the conformance process set forth in 29 CFR 5.5(a)(1)(ii) (or the EO minimum wage rate, if it is higher than the conformed wage rate). The EO minimum wage rate will be adjusted annually. Please note that this EO applies to the above-mentioned types of contracts entered into by the federal government that are subject to the Davis-Bacon Act itself, but it does not apply to contracts subject only to the Davis-Bacon Related Acts, including those set forth at 29 CFR 5.1(a)(2)-(60). Additional information on contractor requirements and worker protections under the EO is available at www.dol.gov/whd/govcontracts.

Modification Number	Publication Date
0	01/04/2019

SUWV2015-001 01/01/2014

	Rates	Fringes
BRICKLAYER		
Barbour, Berkeley, Doddridge, Gilmer, Grant, Hampshire, Hardy, Harrison, Jefferson, Lewis, Marion, Mineral, Monongalia, Morgan,		

Pendleton, Pocahontas, Preston, Randolph, Taylor, Tucker, Upshur, Webster	$ 30.74	18.21
Boone, Braxton, Clay, Fayette, Greenbrier, Kanawha, Logan, McDowell, Mercer, Monroe, Nicholas, Putnam, Raleigh, Summers, Wyoming	$ 29.66	20.20
Brooke, Hancock	$ 29.94	16.22
Cabell, Lincoln, Mason, Mingo, Wayne	$ 30.61	20.88
Calhoun, Jackson, Pleasants, Ritchie, Roane, Wirt, Wood	$ 30.33	15.27
Marshall, Ohio, Tyler, Wetzel	$ 30.01	16.26

CARPENTER

Berkeley, Grant, Hampshire, Hardy, Jefferson, Mineral, Morgan, Pendleton	$ 31.26	15.90
Brooke, Hancock, Marshall, Ohio	$ 27.86	19.30
Remaining Counties	$ 27.72	19.44

CEMENT MASON/CONCRETE FINISHER

All Counties	$ 28.67	18.85

DIVER

Berkeley, Grant, Hampshire, Hardy, Jefferson, Mineral, Morgan, Pendleton		
Diver Tender	$ 31.26	15.90
Diver	$ 32.25	15.90
Brooke, Hancock, Marshall, Monongalia, Ohio, Wetzel		
Diver Tender	$ 32.01	16.76
Diver	$ 48.02	16.76
Remaining Counties		
Diver Tender	$ 27.72	19.44
Diver	$ 28.27	19.44

ELECTRICIAN (SIGNAL & LIGHTING)

Equipment Operator	$ 23.30	17.99
Flagger	$ 17.00	7.39
Groundman/Truck Driver	$ 20.79	17.89
Installer	$ 26.21	18.11
Technician	$ 29.12	18.22

ELECTRICIAN

Barbour, Doddridge, Harrison, Lewis, Marion, Monongalia, Pendleton, Pocahontas, Preston, Randolph, Taylor, Tucker, Upshur	$ 30.14	21.14

Berkeley, Grant, Hampshire, Hardy, Jefferson, Mineral, Morgan..	$ 30.50	15.78
Boone, Braxton, Calhoun, Clay, Fayette, Gilmer, Kanawha, Nicholas, Putnam, Raleigh, Roane, Summers, Webster, Wyoming.....	$ 35.34	16.62
Brooke, Marshall, Ohio, Wetzel.....	$ 28.35	22.74
Cabell, Lincoln, Logan, Mason, Mingo, Wayne.....	$ 32.62	21.70
Greenbrier, McDowell, Mercer, Monroe.....	$ 25.05	16.32
Hancock.....	$ 34.00	29.10
Jackson, Pleasants, Ritchie, Tyler, Wirt, Wood..	$ 31.56	21.43

IRONWORKER

Barbour, Brooke, Hancock, Harrison, Marion, Marshall, Monongalia, Ohio, Taylor, Tyler, Wetzel.	$ 35.74	22.84
Berkeley, Grant, Hampshire, Hardy, Jefferson, Mineral, Morgan, Pendleton, Preston, Tucker.....	$ 33.29	17.39
Boone, Braxton, Clay, Fayette, Kanawha, Lincoln, Logan, McDowell, Mingo, Nicholas, Putnam, Raleigh, Randolph, Webster, Wyoming..	$ 34.87	19.50
Cabell, Wayne.....	$ 33.89	21.98
Calhoun, Doddridge, Gilmer, Jackson, Lewis, Mason, Pleasants, Ritchie, Roane, Upshur, Wirt, Wood...	$ 33.02	20.10
Greenbrier, Mercer, Monroe, Pocahontas, Summers.	$ 35.43	16.13

LABORER

Class 1.....	$ 26.95	16.30
Class 2.....	$ 25.92	16.30
Class 3.....	$ 24.86	16.30

LABORER CLASSIFICATIONS:

GROUP 1: Powderman, Laser Screed Operator, and GPS Operator.

GROUP 2: Pipelayer (Including Laser Beam Set Up), Form Setter (Road), Drill Operator, Air Tool Operator, Grade Checker and Asphalt Raker, Vibrator Man, Whacker, Chainsaw Operator, Mortarman, Brick Mason Tender, Cement Finisher Tender, Drill Tender, Powderman Tender, Water Proofer, Sheeter & Shorer, Placement of Lagging, Pipelayer Tender, Bull-Float Man, Pavement Reinforcing Placer, Handyman, Signal Man, Greencutter, Georgia Power Buggie, Burner, Cement Blower Man, Bituminous Hand Sprayer, Bork 250 Remote Control Ditch Witch and Walk Behind Concrete Saw, Mulcher and Seeder (hand and machine), Installation of Ground Mounted Beams and Signs

including Concrete Footers, Installation of Overhead Sign Supports and Signs including Concrete Footers, Installation of Guardrail and Anchors Assemblies, Tree Trimmer, Caisson Bottom Man, Bush Hammering, Core Drilling, Placement and Mixing of Grout and Bridge Demolition Specialist.**

GROUP 3: Flag Person, Traffic Control Maintenance Person, Carpenter's Tender, and General Laborer.

PAINTER

Barbour, Berkeley, Doddridge, Gilmer, Grant, Hampshire, Hardy, Harrison, Jefferson, Lewis, Marion, Mineral, Monongalia, Morgan, Pendleton, Preston, Randolph, Taylor, Tucker, Upshur, Webster	$ 31.87	14.20
Boone, Braxton, Cabell, Calhoun, Clay, Fayette, Greenbrier, Kanawha, Lincoln, Logan, Mason, McDowell, Mercer, Mingo, Monroe, Nicholas, Pocahontas, Putnam, Raleigh, Summers, Wayne, Wyoming	$ 32.05	14.30
Brooke, Hancock, Marshall, Ohio, Wetzel	$ 30.95	14.36
Jackson, Pleasants, Ritchie, Roane, Tyler, Wirt, Wood	$ 30.84	14.30

PILEDRIVERMAN

Berkeley, Grant, Hampshire, Hardy, Jefferson, Mineral, Morgan, Pendleton	$ 32.25	15.90
Brooke, Hancock, Marshall, Monongalia, Ohio, Wetzel	$ 32.01	16.76
Remaining Counties	$ 28.27	19.44

POWER EQUIPMENT OPERATOR:

Class 1	$ 33.25	18.60
Class 2	$ 30.49	18.60
Class 3	$ 29.38	18.60
Class 4	$ 25.92	18.60
Class 5A	$ 26.04	18.60
Class 5B	$ 28.64	18.60
Class 5C	$ 26.94	18.60

POWER EQUIPMENT OPERATOR CLASSIFICATIONS:

GROUP 1: Cranes, tower cranes, derricks, derrick boats, draglines, clamshells, cableways, boom truck, loaders of 6 cubic yard capacity and over, excavators and shovels with an operating weight of 110,000 pounds and over.

GROUP 2: Loaders up to 6 cubic yard capacity, gradall, hoist 2 drums or more, mixer plant (2 or more mixers includiing batch

control), pile driver operator, core drill, trencher, backhoe, asphalt paver, cement paver, rotary drill, bulldozers, concrete pump, controlled fine grade machine, slip form paver, log loader, log skidder, motor grader, rubber tired scraper, tractor pan, Roto Miller, tow or work boat, mobile conveyor, transloader, articulating equipment, material hauler, carry deck, compactor with blade, skidsteer including attachments, fork lift, self-propelled concrete spreader, concrete finishing machine, derrick (single drum), hoist (single drum), single drum paver, air tugger, Ross Carrier, multiple concrete saw, hydraulic post driver, horizontal road-boring machine, tie distributor, track lining machine, ballast tamper, anchor application machine, ribbon rail puller, ballast regulator, auto sled, turn table, pavement breaker, asphalt batch plant, concrete batch plant, crushing plant, compactor with blade, power broom, vac-all truck, self-propelled concrete spreader and concrete finishing machine, mechanics with tools and greasers, excavators, and shovels with an operating weight of up to 110,000 pounds.

GROUP 3: Asphalt roller

GROUP 4: Air compressor, concrete mixer (under 1 cubic yard), light plant, mechanic's tender, assistant engineer, screedman, spreader box man, joint sealer and pump, steam jenny, stationary conveyor (belt or bucket), A-frame, tire man, screening and washing plant, form sub-grader, power form handling equipment, burlap and curing machine, form grader, bull float, bar and joint installing machine, roller and compactor, hydroblaster, concrete mixer (single drum, 1 cu. yd. or over), portable concrete saw and highway striping operator. Utility operators shall be paid Group 2 rate when operating 1 to 5 air compressors, pumps, stationary conveyors (belt or bucket), light plants, and gasoline or diesel powered welders and all farm type tractors.

GROUP 5A: Those operating off-road trucks in the following counties: Barbour, Braxton, Boone, Calhoun, Clay, Doddridge, Fayette, Gilmer, Greenbrier, Harrison, Jackson, Kanawha, Lewis, Marion, Mercer, McDowell, Monongalia, Monroe, Nicholas, Pleasants, Pocohontas, Preston, Putnam, Raleigh, Randolph, Roane, Ritchie, Summers, Taylor, Tucker, Tyler, Upshur, Webster, Wirt, Wood, and Wyoming.

GROUP 5B: Those operating off-road trucks in the following counties: Cabell, Lincoln, Logan, Mason, Mingo, and Wayne.

GROUP 5C: Those operating off-road trucks in the following counties: Berkeley, Grant, Hampshire, Hardy, Jefferson, Mineral, Morgan and Pendleton.

FOOTNOTE: $2.00 per hour shall be added to the Group 1 rate for individuals operating a lattice boom crane with a fixed boom of 150 feet or more. $0.25 per hour shall be added to all of the above schedules for underground work.

TRUCK DRIVER
Berkeley, Grant,
Hampshire, Hardy,
Jefferson, Mineral,

Morgan, Pendleton		
Class 1	$ 25.72	18.11
Class 2	$ 26.61	18.11
Class 3	$ 27.38	18.11
Brooke, Hancock		
Class 1	$ 29.17	13.86
Class 2	$ 30.92	13.86
Class 3	$ 31.71	13.86
Cabell, Lincoln, Logan, Mason, Mingo, Wayne		
Class 1	$ 29.79	15.60
Class 2	$ 30.76	15.60
Class 3	$ 31.55	15.60
Marshall, Ohio, Wetzel		
Class 1	$ 26.26	16.81
Class 2	$ 27.16	16.81
Class 3	$ 27.76	16.81
Remaining Counties		
Class 1	$ 26.97	16.15
Class 2	$ 27.76	16.15
Class 3	$ 28.44	16.15

TRUCK DRIVER CLASSIFICATIONS:

GROUP 1: Single Axle Trucks used as Dumps, Supply, Fuel, Water, Van, Flatbody, Monorail, Distributor (other than Bituminous Distributors) including Towed Single Units, Material Checkers and Receivers, Greasers, Tireman and Mechanic Tenders (Trucks), Warehouse, Yardmen and Pick-up trucks.

GROUP 2: Tandem and Tri-Axle Trucks used as Dumps, Supply, Fuel, Water, Van, Flatbody, Monorail and including Towed Single Units, Truck Tractors used in combination with Dump, Van, Tank, Flatbed, Low platform or Pole Trailers, Bituminous Distributors, Agitator or Mixer Trucks (up to 20 cubic-yards), Rubber-tired tractors (towing and pushing), Drag and Tag-alongs.

GROUP 3: Mobile Metered Mixer, Agitator or Mixer Trucks (over 20 cubic yards), & Mechanic Truck.

A. Double Hitch equipment operated by 1 driver shall pay 50% more than the wages set out above.

B. $0.25 per hour shall be added for tunneling and all other underground work.

WELDERS - Receive rate prescribed for craft performing operation to which welding is incidental.

==========

Note: Executive Order (EO) 13706, Establishing Paid Sick Leave for Federal Contractors applies to all contracts subject to the Davis-Bacon Act for which the contract is awarded (and any solicitation was issued) on or after January 1, 2017. If this contract is covered by the EO, the contractor must provide employees with 1 hour of paid sick leave for every 30 hours they work, up to 56 hours of paid sick leave each year.

Employees must be permitted to use paid sick leave for their own illness, injury or other health-related needs, including preventive care; to assist a family member (or person who is like family to the employee) who is ill, injured, or has other health-related needs, including preventive care; or for reasons resulting from, or to assist a family member (or person who is like family to the employee) who is a victim of, domestic violence, sexual assault, or stalking. Additional information on contractor requirements and worker protections under the EO is available at www.dol.gov/whd/govcontracts.

Unlisted classifications needed for work not included within the scope of the classifications listed may be added after award only as provided in the labor standards contract clauses (29CFR 5.5 (a) (1) (ii)).

The body of each wage determination lists the classification and wage rates that have been found to be prevailing for the cited type(s) of construction in the area covered by the wage determination. The classifications are listed in alphabetical order of "identifiers" that indicate whether the particular rate is a union rate (current union negotiated rate for local), a survey rate (weighted average rate) or a union average rate (weighted union average rate).

Union Rate Identifiers

A four letter classification abbreviation identifier enclosed in dotted lines beginning with characters other than "SU" or "UAVG" denotes that the union classification and rate were prevailing for that classification in the survey. Example: PLUM0198-005 07/01/2014. PLUM is an abbreviation identifier of the union which prevailed in the survey for this classification, which in this example would be Plumbers. 0198 indicates the local union number or district council number where applicable, i.e., Plumbers Local 0198. The next number, 005 in the example, is an internal number used in processing the wage determination. 07/01/2014 is the effective date of the most current negotiated rate, which in this example is July 1, 2014.

Union prevailing wage rates are updated to reflect all rate changes in the collective bargaining agreement (CBA) governing this classification and rate.

Survey Rate Identifiers

Classifications listed under the "SU" identifier indicate that no one rate prevailed for this classification in the survey and the published rate is derived by computing a weighted average rate based on all the rates reported in the survey for that classification. As this weighted average rate includes all rates reported in the survey, it may include both union and non-union rates. Example: SULA2012-007 5/13/2014. SU indicates the rates are survey rates based on a weighted average calculation of rates and are not majority rates. LA indicates

the State of Louisiana. 2012 is the year of survey on which these classifications and rates are based. The next number, 007 in the example, is an internal number used in producing the wage determination. 5/13/2014 indicates the survey completion date for the classifications and rates under that identifier.

Survey wage rates are not updated and remain in effect until a new survey is conducted.

Union Average Rate Identifiers

Classification(s) listed under the UAVG identifier indicate that no single majority rate prevailed for those classifications; however, 100% of the data reported for the classifications was union data. EXAMPLE: UAVG-OH-0010 08/29/2014. UAVG indicates that the rate is a weighted union average rate. OH indicates the state. The next number, 0010 in the example, is an internal number used in producing the wage determination. 08/29/2014 indicates the survey completion date for the classifications and rates under that identifier.

A UAVG rate will be updated once a year, usually in January of each year, to reflect a weighted average of the current negotiated/CBA rate of the union locals from which the rate is based.

WAGE DETERMINATION APPEALS PROCESS

1.) Has there been an initial decision in the matter? This can be:

* an existing published wage determination
* a survey underlying a wage determination
* a Wage and Hour Division letter setting forth a position on a wage determination matter
* a conformance (additional classification and rate) ruling

On survey related matters, initial contact, including requests for summaries of surveys, should be with the Wage and Hour Regional Office for the area in which the survey was conducted because those Regional Offices have responsibility for the Davis-Bacon survey program. If the response from this initial contact is not satisfactory, then the process described in 2.) and 3.) should be followed.

With regard to any other matter not yet ripe for the formal process described here, initial contact should be with the Branch of Construction Wage Determinations. Write to:

Branch of Construction Wage Determinations
Wage and Hour Division
U.S. Department of Labor
200 Constitution Avenue, N.W.
Washington, DC 20210

2.) If the answer to the question in 1.) is yes, then an

interested party (those affected by the action) can request review and reconsideration from the Wage and Hour Administrator (See 29 CFR Part 1.8 and 29 CFR Part 7). Write to:

Wage and Hour Administrator
U.S. Department of Labor
200 Constitution Avenue, N.W.
Washington, DC 20210

The request should be accompanied by a full statement of the interested party's position and by any information (wage payment data, project description, area practice material, etc.) that the requestor considers relevant to the issue.

3.) If the decision of the Administrator is not favorable, an interested party may appeal directly to the Administrative Review Board (formerly the Wage Appeals Board). Write to:

Administrative Review Board
U.S. Department of Labor
200 Constitution Avenue, N.W.
Washington, DC 20210

4.) All decisions by the Administrative Review Board are final.

==========

END OF GENERAL DECISION